US005693956A

United States Patent [19]

Shi et al.

[11] Patent Number: 5,693,956

[45] Date of Patent: Dec. 2, 1997

[54] **INVERTED OLEDS ON HARD PLASTIC SUBSTRATE**

[75] Inventors: **Song Q. Shi**, Phoenix, Ariz.; **Hsing-Chung Lee**, Calabasas, Calif.; **Cheng-Ping Wei**, Gilbert, Ariz.

[73] Assignee: **Motorola**, Schaumburg, Ill.

[21] Appl. No.: **688,632**

[22] Filed: **Jul. 29, 1996**

[51] **Int. Cl.**[6] **H01L 33/00**; H01L 35/24; H01L 51/00

[52] **U.S. Cl.** **257/40**; 257/88; 257/91; 257/100; 257/103; 257/679; 257/680

[58] **Field of Search** 257/40, 103, 99, 257/88, 100, 91, 679, 680

[56] **References Cited**

U.S. PATENT DOCUMENTS

5,153,073	10/1992	Ohnuma et al.	428/461
5,408,109	4/1995	Heeger et al.	257/103 X
5,482,896	1/1996	Tang	437/209
5,530,269	6/1996	Tang	257/88
5,583,350	12/1996	Norman et al.	257/88

Primary Examiner—William Mintel

Attorney, Agent, or Firm—Eugene A. Parsons

[57] **ABSTRACT**

A hard plastic card display device including a hard plastic card having a major surface and a driver circuit. A display, including a plurality of inverted organic light emitting diodes, is formed on the major surface and coupled to the driver circuit.
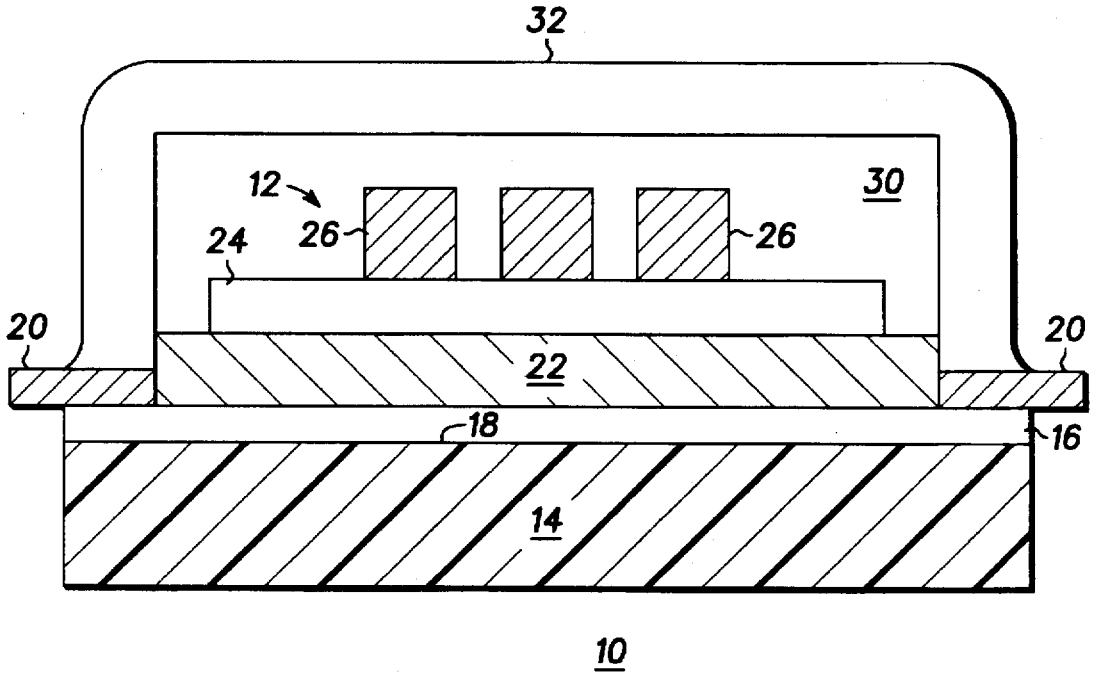
6 Claims, 1 Drawing Sheet