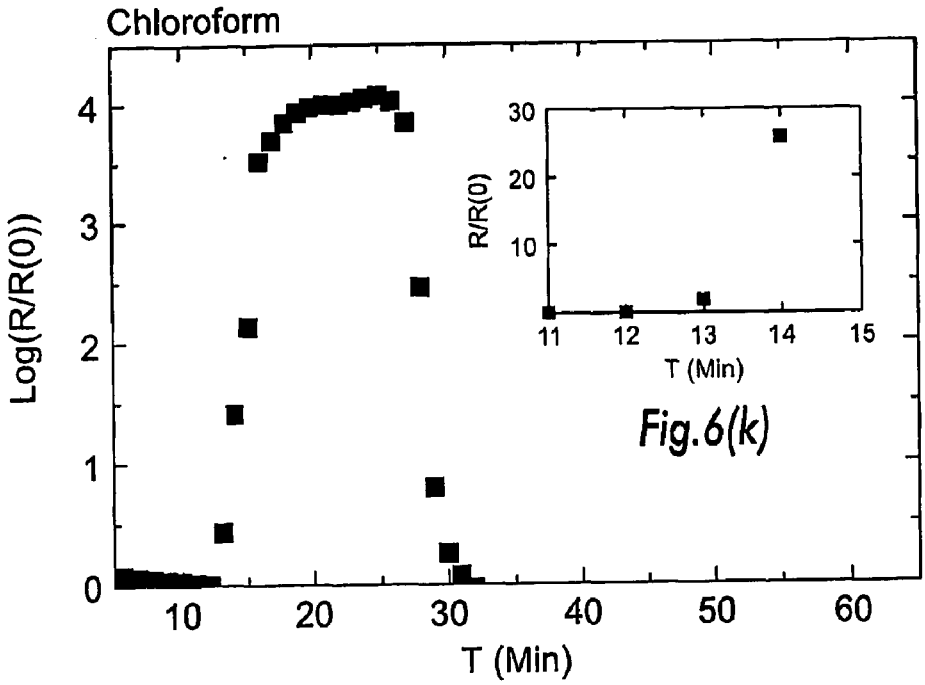
Chloroform
Log(R/R(0))
T (Min)
R/R(0)
T (Min)
Fig.6(k)

Fig.6(j)

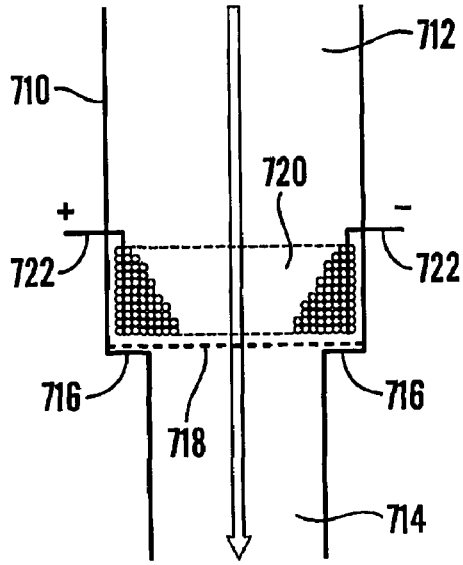
710
712
720
+
−
722
722
716
716
718
714

Fig.7