Dec. 23, 1969 A. A. NAUJOKAS 3,485,556

MULTIFOCAL PLASTIC OPHTHALMIC LENS

Filed April 1, 1966

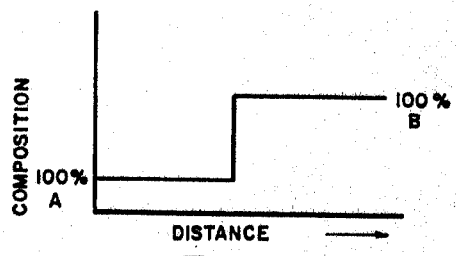


FIG. 1

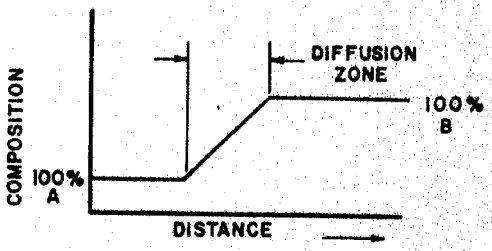


FIG. 2

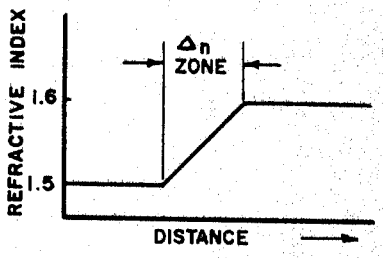


FIG. 3

FIG. 4

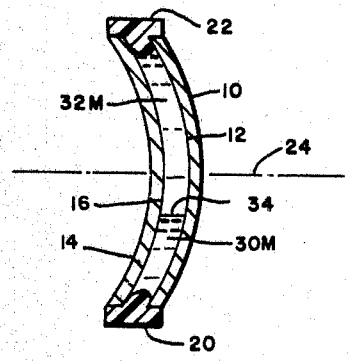


FIG. 5

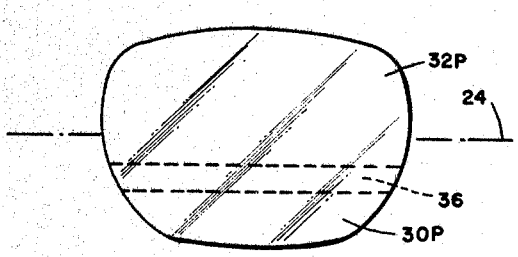


FIG. 6

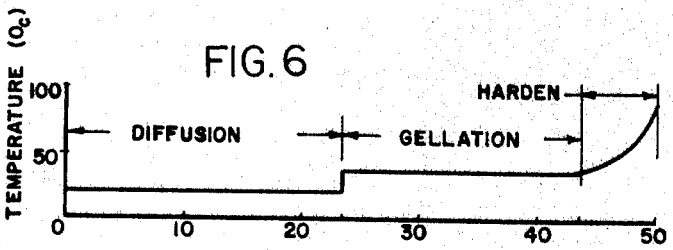


ANDRIUS A. NAUJOKAS
INVENTOR.

BY Lowell G. Wise
ATTORNEY