MANUFACTURE OF SPECTACLE FRAMES

Filed March 12, 1959 4 Sheets-Sheet 2

Fig. 5.

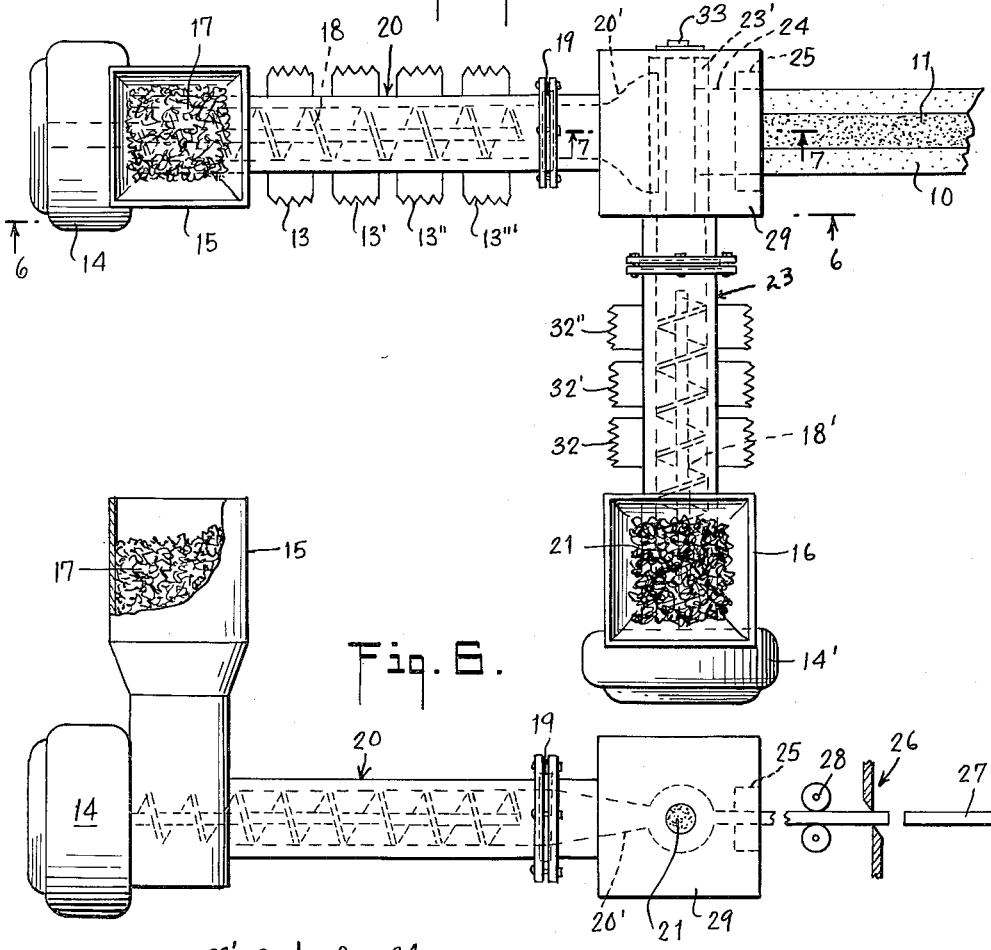


Fig. 6.

Fig. 7.

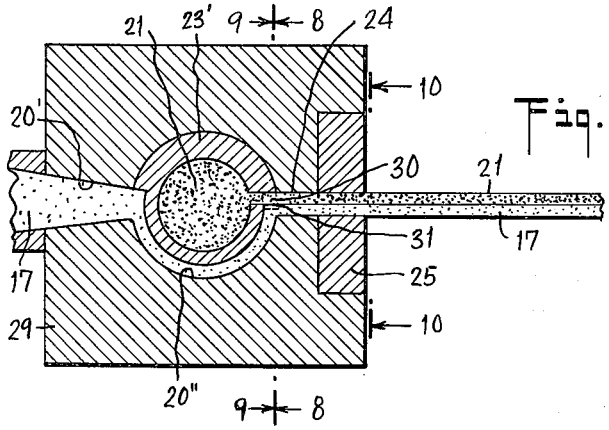


INVENTOR.
WILLIAM P. ROWLAND
BY Carey, Hart & Temple
ATTORNEYS