350-362 SSS SR
3/14/78 OR 4,078,856

United States Patent [19]
Thompson et al.

[11] **4,078,856**
[45] **Mar. 14, 1978**

[54] **LIGHT VALVE**

[75] Inventors: **Robert I. Thompson,** Plainview; **Robert L. Saxe,** New York, both of N.Y.

[73] Assignee: **Research Frontiers Incorporated,** Plainview, N.Y.

[21] Appl. No.: **667,665**

[22] Filed: **Mar. 17, 1976**

[51] **Int. Cl.**[2] **G02F 1/16**
[52] **U.S. Cl.** **350/362**
[58] **Field of Search** ..... 350/160, 161, 267; 340/324 R, 324 M

[56] **References Cited**

U.S. PATENT DOCUMENTS

3,257,903	6/1966	Marks	350/160 R
3,341,274	9/1967	Marks	350/160 R
3,743,382	7/1973	Rosenberg	350/160 R
3,841,732	10/1974	Marks	350/160 R

Primary Examiner—William L. Sikes
Attorney, Agent, or Firm—Jacobs & Jacobs

[57] **ABSTRACT**

A light valve and fluid suspension therefor which when activated decrease the transmission of radiation therethrough.
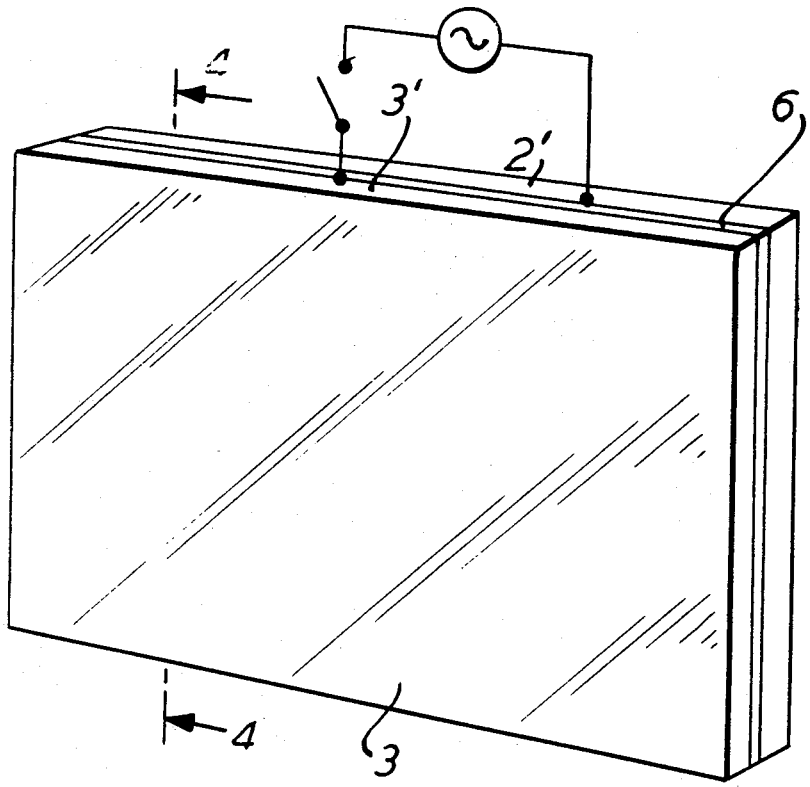
12 Claims, 11 Drawing Figures