BIFOCAL LOUPES AND TELEMICROSCOPIC LENSES THEREFOR

Filed Dec. 7, 1962 3 Sheets-Sheet 1

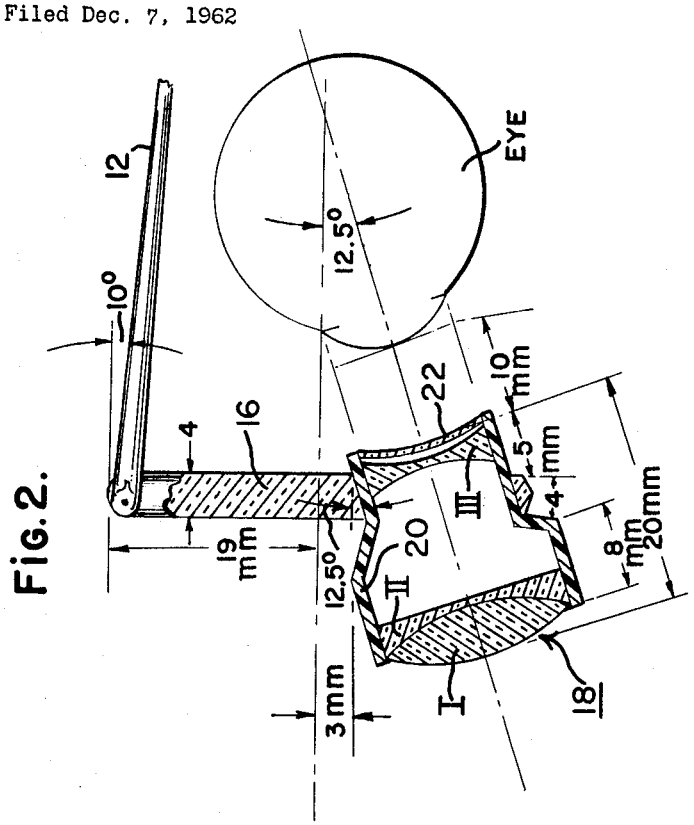

Fig. 2.

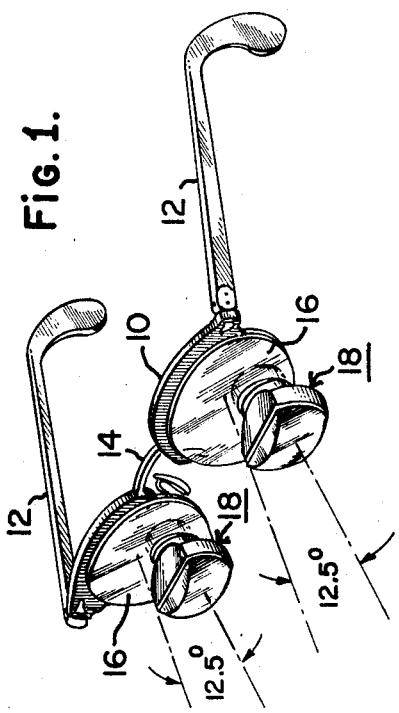

Fig. 1.

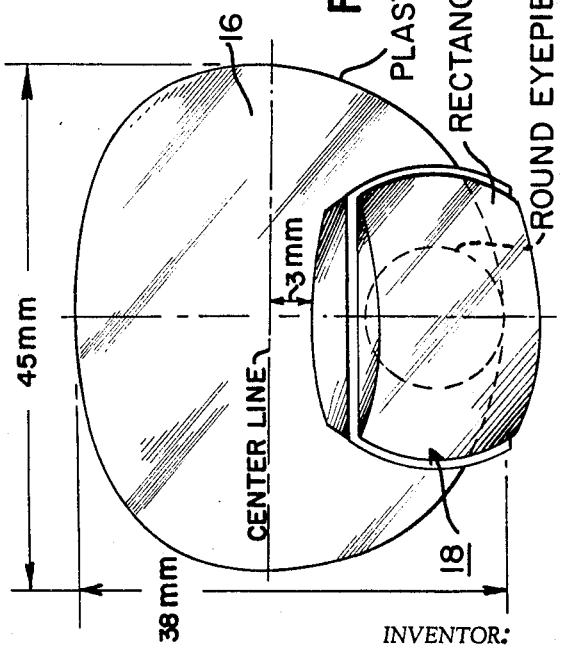

Fig. 3.

INVENTOR:
WILLIAM FEINBLOOM
BY Charles H. Brown
ATTORNEY