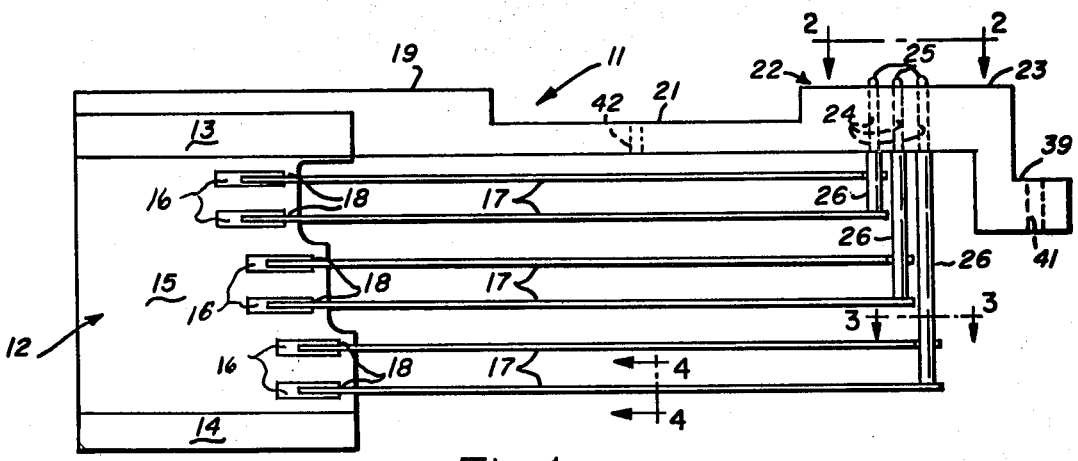

Fig_1
PRIOR ART

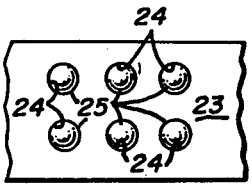

Fig_2

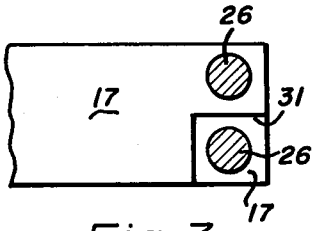

Fig_3

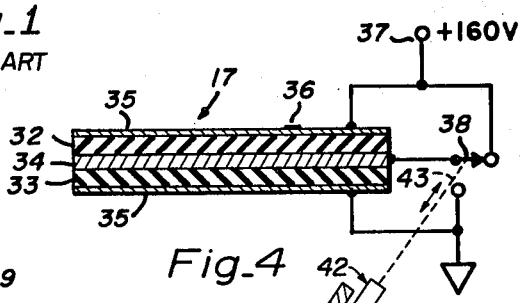

Fig_4

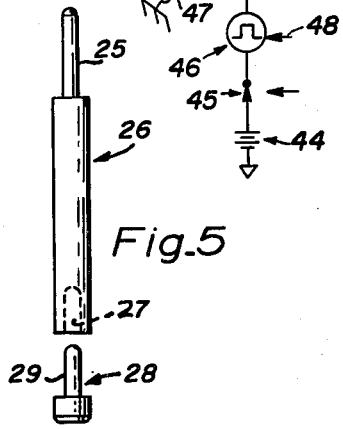

Fig_5

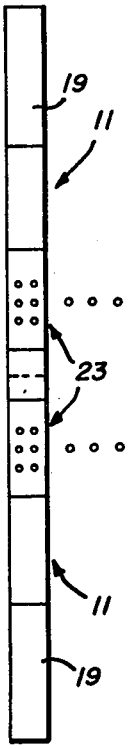

Fig_6