PROBE POSITIONING DEVICE FOR USE IN MEASURING AND CHECKING SEMICONDUCTOR SPECIMENS

Filed Dec. 29, 1961 5 Sheets-Sheet 1

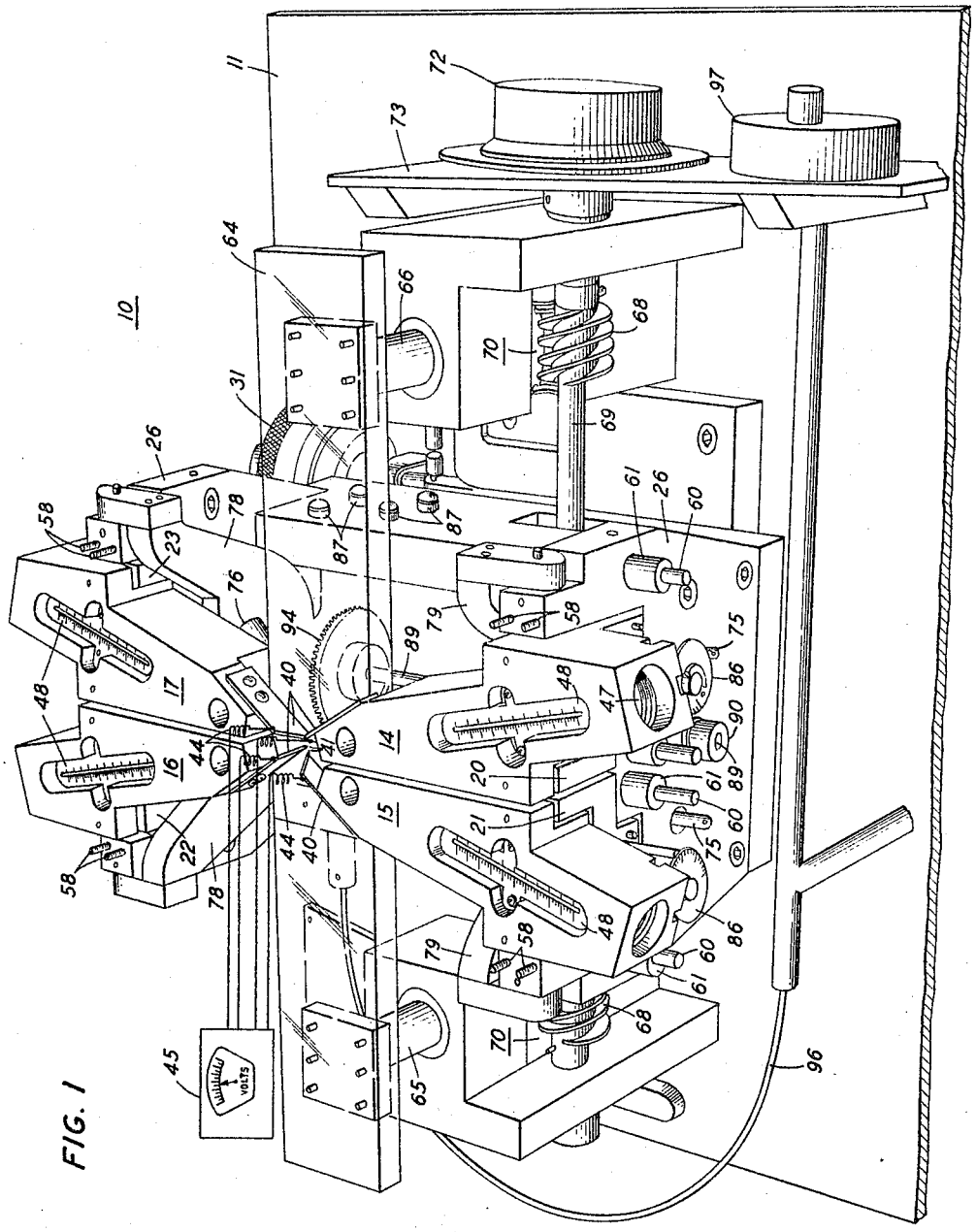

FIG. 1

INVENTOR
H. K. KRANTZ
BY
C. E. Hirsch Jr.
ATTORNEY