US007461456B2

(12) **United States Patent**
Tsushio et al.

(10) **Patent No.: US 7,461,456 B2**
(45) **Date of Patent: Dec. 9, 2008**

(54) **DRY SHAVER**

(75) Inventors: **Toshiyuki Tsushio**, Hikone (JP); **Jyuzaemon Iwasaki**, Nagahama (JP); **Takeshi Shiba**, Hikone (JP); **Masanobu Yamasaki**, Hikone (JP)

(73) Assignee: **Matsushita Electric Works, Ltd.**, Osaka (JP)

(*) Notice: Subject to any disclaimer, the term of this patent is extended or adjusted under 35 U.S.C. 154(b) by 234 days.

(21) Appl. No.: **11/013,447**

(22) Filed: **Dec. 17, 2004**

(65) **Prior Publication Data**

US 2005/0138821 A1 Jun. 30, 2005

(30) **Foreign Application Priority Data**

Dec. 26, 2003 (JP) 2003-435220

(51) **Int. Cl.**
B26B 19/04 (2006.01)

(52) **U.S. Cl.** **30/43.92**; 30/34.1; 30/527

(58) **Field of Classification Search** 30/43.91–43.92, 30/527, 531, 528, 529, 532
See application file for complete search history.

(56) **References Cited**

U.S. PATENT DOCUMENTS

3,081,540 A * 3/1963 Yoshida 30/41.6
3,521,093 A * 7/1970 Harms 310/19
3,858,314 A * 1/1975 Brenneman et al. 30/43.92
3,973,323 A * 8/1976 Trees 30/43.92
4,003,131 A * 1/1977 Groothuis 30/43.92
5,159,755 A * 11/1992 Jestadt et al. 30/43.92
5,367,771 A * 11/1994 Mukai 30/43.92
5,551,154 A * 9/1996 Tanahashi et al. 30/43.92
5,787,593 A * 8/1998 Althaus 30/527
5,953,824 A * 9/1999 Ferraro et al. 30/527
6,073,348 A * 6/2000 Shiba 30/34.1
6,115,924 A * 9/2000 Oldroyd 30/527
6,151,780 A * 11/2000 Klein 30/43.92
6,308,414 B1 * 10/2001 Parsonage et al. 30/43.91
6,684,509 B1 * 2/2004 Best et al. 30/43.92
2002/0104223 A1 * 8/2002 Oldroyd 30/532
2004/0128834 A1 * 7/2004 Royle 30/43.92
2004/0163260 A1 * 8/2004 Uchiyama 30/43.92
2004/0237310 A1 * 12/2004 Shiba et al. 30/43.92

FOREIGN PATENT DOCUMENTS

EP 0 239 920 A2 3/1986
GB 2 266 070 A 10/1993
JP 05-200166 A1 8/1993
WO WO-03/041918 A1 5/2003
WO WO 2004/030874 * 4/2004

* cited by examiner

Primary Examiner—Boyer D. Ashley
Assistant Examiner—Laura M. Lee
(74) *Attorney, Agent, or Firm*—Cheng Law Group PLLC

(57) **ABSTRACT**

A dry shaver includes a swingable shaving head which is provided with a pair of support points through which the shaving head is supported to a grip through a linkage mechanism. The linkage mechanism includes a pair of cranks each connected at its one end to each one of the support points and connected at the other end to each one of the anchor points on the side of the grip. A frame projects on top of the grip in an overlapping relation with the shaving head to give the anchor points which are positioned upwardly of the support points with respect to a height axis of the grip for suspending the shaving head an top of the grip by the frame.
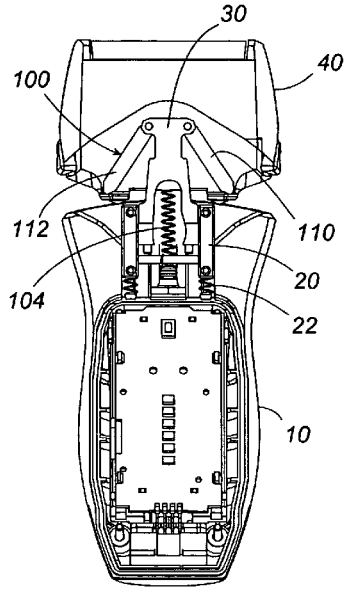
12 Claims, 11 Drawing Sheets