US009638456B2

(12) **United States Patent**
**Renken et al.**

(10) **Patent No.: US 9,638,456 B2**
(45) **Date of Patent: May 2, 2017**

(54) **MOUNTING SYSTEM FOR A GENERATOR ASSEMBLY**

(75) Inventors: **David J. Renken**, Prior Lake, MN (US); **Bernard W. Benson**, Lakeville, MN (US); **Tom J. Niemi**, Eden Prairie, MN (US)

(73) Assignee: **THERMO KING CORPORATION**, Minneapolis, MN (US)

( * ) Notice: Subject to any disclaimer, the term of this patent is extended or adjusted under 35 U.S.C. 154(b) by 3203 days.

(21) Appl. No.: **11/669,681**

(22) Filed: **Jan. 31, 2007**

(65) **Prior Publication Data**

US 2008/0179489 A1 Jul. 31, 2008

(51) **Int. Cl.**

| | |
|---|---|
| ***H02K 5/00*** | (2006.01) |
| ***F25D 23/00*** | (2006.01) |
| ***F25D 19/00*** | (2006.01) |

(52) **U.S. Cl.**

CPC ..... ***F25D 23/006*** (2013.01); ***F25D 19/003*** (2013.01)

(58) **Field of Classification Search**

USPC ..... 248/637, 674, 675, 201, 220.21, 220.22, 248/221.11, 222.51, 222.52; 123/2; 62/239, 323.1; 322/100, 1; 290/1

See application file for complete search history.

(56) **References Cited**

U.S. PATENT DOCUMENTS

| | | | | |
|---|---|---|---|---|
| 3,592,019 | A | | 7/1971 | Beaudet |
| 4,109,485 | A | | 8/1978 | Grosskopf |
| 4,348,871 | A | | 9/1982 | Androff |
| 4,394,818 | A | | 7/1983 | Brownfield et al. |
| 4,732,360 | A | | 3/1988 | Bodenheimer |
| 4,834,572 | A | * | 5/1989 | Harrington et al. ..... 403/316 |
| 5,139,359 | A | * | 8/1992 | Rakar et al. ..... 403/24 |
| 5,181,541 | A | * | 1/1993 | Bodenheimer ..... 137/899 |
| 5,222,373 | A | | 6/1993 | Waldschmidt |
| 5,292,096 | A | | 3/1994 | Bodenheimer |
| 5,410,891 | A | | 5/1995 | Ripert |
| 5,498,097 | A | | 3/1996 | Shapess |
| 5,678,512 | A | * | 10/1997 | Colton ..... 123/2 |
| 5,739,675 | A | * | 4/1998 | Green et al. ..... 322/1 |
| 5,744,940 | A | * | 4/1998 | Colton et al. ..... 322/1 |
| 5,762,232 | A | * | 6/1998 | Green et al. ..... 220/564 |
| 5,804,946 | A | | 9/1998 | Gaubatz et al. |

(Continued)

FOREIGN PATENT DOCUMENTS

| | | |
|---|---|---|
| JP | 4327732 | 11/1992 |
| JP | 4340032 | 11/1992 |
| WO | WO 2007035318 A2 * | 3/2007 |

*Primary Examiner* — K Wood

(74) *Attorney, Agent, or Firm* — Hamre, Schumann, Mueller & Larson, P.C.

(57) **ABSTRACT**

A generator assembly for mounting to a container. The generator assembly includes a container frame having a top casting and a receiver bracket. The generator assembly includes a frame, a generator coupled to the frame, a clamp mounting system including a first clamp coupled to the frame and configured to be coupled to the top casting, and a pin mounting system including a first bracket coupled to the frame and configured to be coupled to the receiver bracket. The generator assembly is such that one of the first clamp and the first bracket is repositionable on the frame to avoid interference with the container when the other of the first clamp and the first bracket is coupled to the corresponding one of the top casting and the receiver bracket.
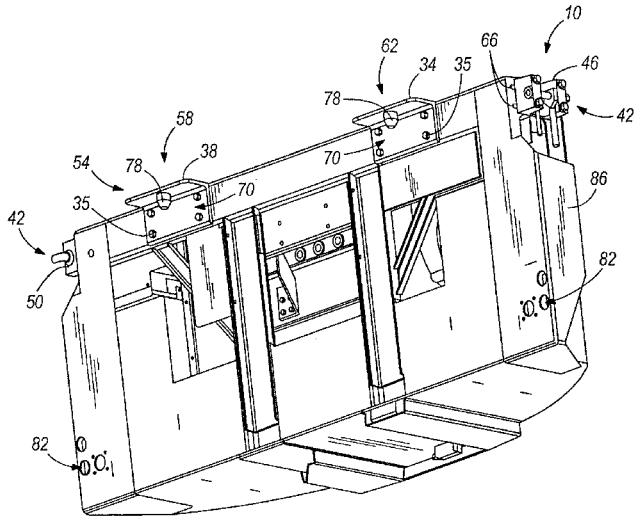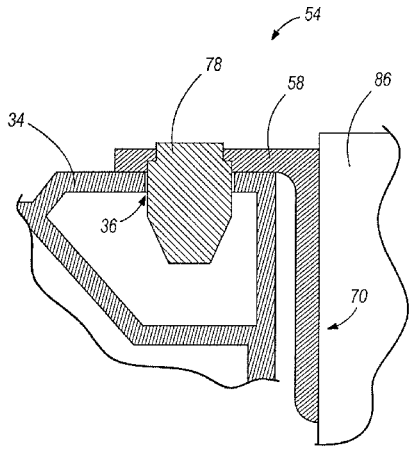
**3 Claims, 7 Drawing Sheets**