United States Patent [19]

L'Esperance

[11] **4,435,856**

[45] **Mar. 13, 1984**

[54] **BIFOCAL INTRAOCULAR LENS STRUCTURE AND SPECTACLE ACTUATION FRAME**

[76] Inventor: **Francis A. L'Esperance,** 255 Oakwood Rd., Englewood, N.J. 07631

[21] Appl. No.: **368,409**

[22] Filed: **Apr. 14, 1982**

[51] **Int. Cl.**[3] **A61F 1/16;** A61F 1/24

[52] **U.S. Cl.** **3/13;** 351/57

[58] **Field of Search** 3/13, 1; 351/54, 57, 351/59, 216, 233

[56] **References Cited**

U.S. PATENT DOCUMENTS

3,752,567	8/1973	Broadhurst	351/57 X
4,010,496	3/1977	Neefe	3/13
4,056,855	11/1977	Kelman	3/13
4,073,014	2/1978	Poler	3/13
4,074,368	2/1978	Levy, Jr. et al.	3/13
4,187,006	2/1980	Neidell	351/57 X
4,257,130	3/1981	Bayers	3/13
4,298,996	11/1981	Barnet	3/13
4,315,337	1/1982	Choyce	3/13
4,366,582	1/1983	Faulkner	3/13
4,368,958	1/1983	Buget	351/233 X

OTHER PUBLICATIONS

Model PC-11 Posterior Chamber, American Medical Optics Advertisement-American Hospital Supply Corp. (4 pages) Aug. 1981.

Primary Examiner—Ronald L. Frinks

Attorney, Agent, or Firm—Hopgood, Calimafde, Kalil, Blaustein & Judlowe

[57] **ABSTRACT**

The invention contemplates structure for surgical implantation within an eye and providing the user with more than one focal length, for viewing at correspondingly different object ranges. In the embodiments disclosed, one intraocular device is relatively fixed in the eye to provide a conventionally available viewing range, for example, distance viewing, and another lens element is movably mounted with respect to the fixed distance-viewing lens in such manner as to provide its selective use in combination with the fixed lens, for close-object viewing.
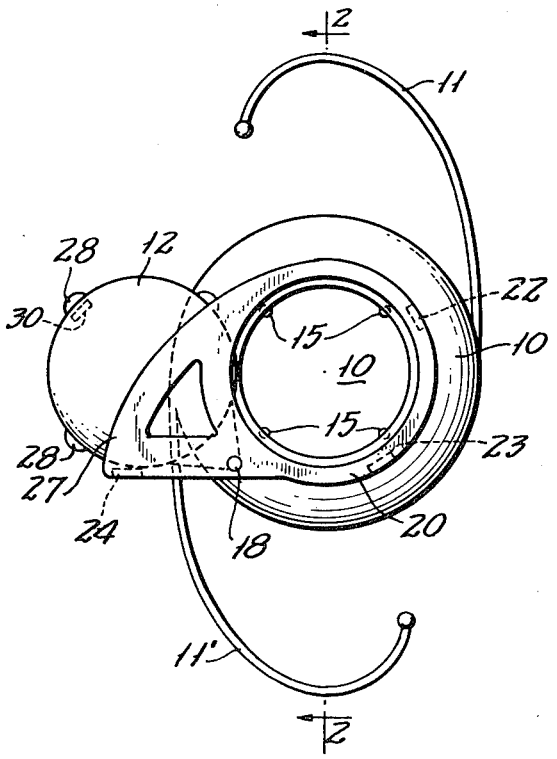
24 Claims, 13 Drawing Figures