US009618756B2

(12) **United States Patent**
Taylor et al.

(10) **Patent No.: US 9,618,756 B2**
(45) **Date of Patent: *Apr. 11, 2017**

(54) **MOLDED DICHROIC MIRROR AND METHOD OF MANUFACTURE THEREOF**

(71) Applicant: **RAYTHEON COMPANY**, Waltham, MA (US)

(72) Inventors: **Byron B. Taylor**, Tucson, AZ (US); **W. Howard Poisl**, Tucson, AZ (US)

(73) Assignee: **RAYTHEON COMPANY**, Waltham, MA (US)

(*) Notice: Subject to any disclaimer, the term of this patent is extended or adjusted under 35 U.S.C. 154(b) by 43 days.

This patent is subject to a terminal disclaimer.

(21) Appl. No.: **14/049,847**

(22) Filed: **Oct. 9, 2013**

(65) **Prior Publication Data**

US 2014/0247479 A1 Sep. 4, 2014

Related U.S. Application Data

(62) Division of application No. 12/896,273, filed on Oct. 1, 2010, now Pat. No. 8,581,161.

(51) **Int. Cl.**

G02B 5/08	(2006.01)
G02B 17/06	(2006.01)
G02B 23/12	(2006.01)
B29D 11/00	(2006.01)
F41G 7/00	(2006.01)
F41G 7/22	(2006.01)
G02B 27/14	(2006.01)
G02B 5/20	(2006.01)

(52) **U.S. Cl.**

CPC ***G02B 27/141*** (2013.01); ***B29D 11/00596*** (2013.01); ***B29D 11/00865*** (2013.01); ***F41G 7/008*** (2013.01); ***F41G 7/2246*** (2013.01); ***F41G 7/2253*** (2013.01); ***F41G 7/2286*** (2013.01); ***F41G 7/2293*** (2013.01); ***G02B 5/08*** (2013.01); ***G02B 5/0825*** (2013.01); ***G02B 5/208*** (2013.01); *G02B 17/0694* (2013.01); *G02B 23/12* (2013.01)

(58) **Field of Classification Search**

CPC G02B 5/08; G02B 5/208; G02B 5/0825
USPC 359/359, 634
See application file for complete search history.

(56) **References Cited**

U.S. PATENT DOCUMENTS

3,114,149 A 12/1963 Jessen, Jr.
3,130,308 A 4/1964 Astheimer
(Continued)

FOREIGN PATENT DOCUMENTS

GB 2100403 A 12/1982

OTHER PUBLICATIONS

Variation of the dielectric constant in alternating fields [online]. Department of Materials Science and Metallurgy, University of Cambridge, May 21, 2010 [retrieved on Feb. 22, 2015]. Retrieved from the Internet: https://web.archive.org/web/20100528104738/http://www.doitpoms.ac.uk/tlplib/dielectrics/variation.php.*
(Continued)

Primary Examiner — Zachary Wilkes
Assistant Examiner — Mitchell Oestreich
(74) *Attorney, Agent, or Firm* — Lando & Anastasi, LLP

(57) **ABSTRACT**

A molded dichroic mirror and method of manufacture thereof. The dichroic minor may be molded from polysiloxane or lithia potash borosilicate and may be coated to reflect an infrared signal and configured to transmit a radio frequency signal between 33 GHz and 37 GHz.
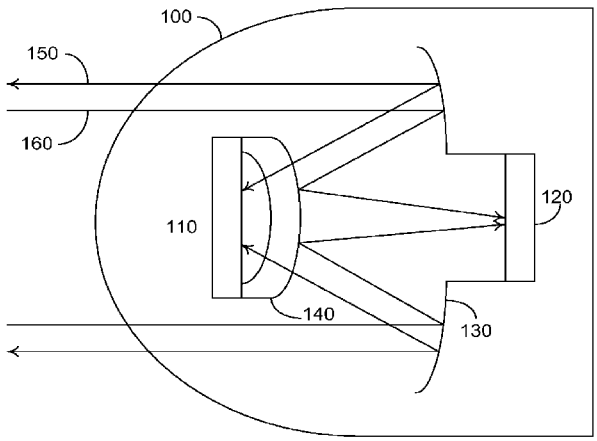
11 Claims, 2 Drawing Sheets