US009411056B2

(12) **United States Patent**
Chou

(10) **Patent No.: US 9,411,056 B2**
(45) **Date of Patent: Aug. 9, 2016**

(54) **WIDE DYNAMIC RANGE BIDIRECTIONAL INTEGRATING ELECTROMETER WITH LOW LEAKAGE SOLID-STATE RESET AND RANGE CHANGE OPERATING OVER AN EXTENDED TEMPERATURE RANGE**

(71) Applicant: **General Electric Company**, Schenectady, NY (US)

(72) Inventor: **Fred Yu-Feng Chou**, Stow, OH (US)

(73) Assignee: **GENERAL ELECTRIC COMPANY**, Schenectady, NY (US)

(*) Notice: Subject to any disclaimer, the term of this patent is extended or adjusted under 35 U.S.C. 154(b) by 56 days.

(21) Appl. No.: **13/755,036**

(22) Filed: **Jan. 31, 2013**

(65) **Prior Publication Data**

US 2014/0209811 A1 Jul. 31, 2014

(51) **Int. Cl.**
G01T 1/18 (2006.01)
G01T 1/185 (2006.01)

(52) **U.S. Cl.**
CPC ***G01T 1/185*** (2013.01)

(58) **Field of Classification Search**
USPC 250/375
See application file for complete search history.

(56) **References Cited**

U.S. PATENT DOCUMENTS

4,050,019	A *	9/1977	Nirschl	324/115
4,717,548	A *	1/1988	Lee	422/82.04
5,426,413	A *	6/1995	Gulczynski	341/144
5,572,118	A *	11/1996	Lewis	324/123 R
6,061,009	A *	5/2000	Krone et al.	341/143
6,977,682	B2 *	12/2005	Mizuno et al.	348/241
2009/0045816	A1 *	2/2009	Robinson	324/457
2009/0121151	A1 *	5/2009	Denton et al.	250/397

* cited by examiner

Primary Examiner — David Porta
Assistant Examiner — Edwin Gunberg
(74) *Attorney, Agent, or Firm* — Cooper Legal Group, LLC

(57) **ABSTRACT**

A radiation monitor includes an ionization chamber for detecting radiation that passes into the ionization chamber. The ionization chamber generates a current flow in response to the detected radiation. An electrometer is electrically connected to the ionization chamber for measuring the current flow generated by the ionization chamber. The electrometer is operable in a plurality of modes based on a magnitude of the current flow generated by the ionization chamber. A method of measuring current flow through an electrometer of a radiation monitor is also provided.
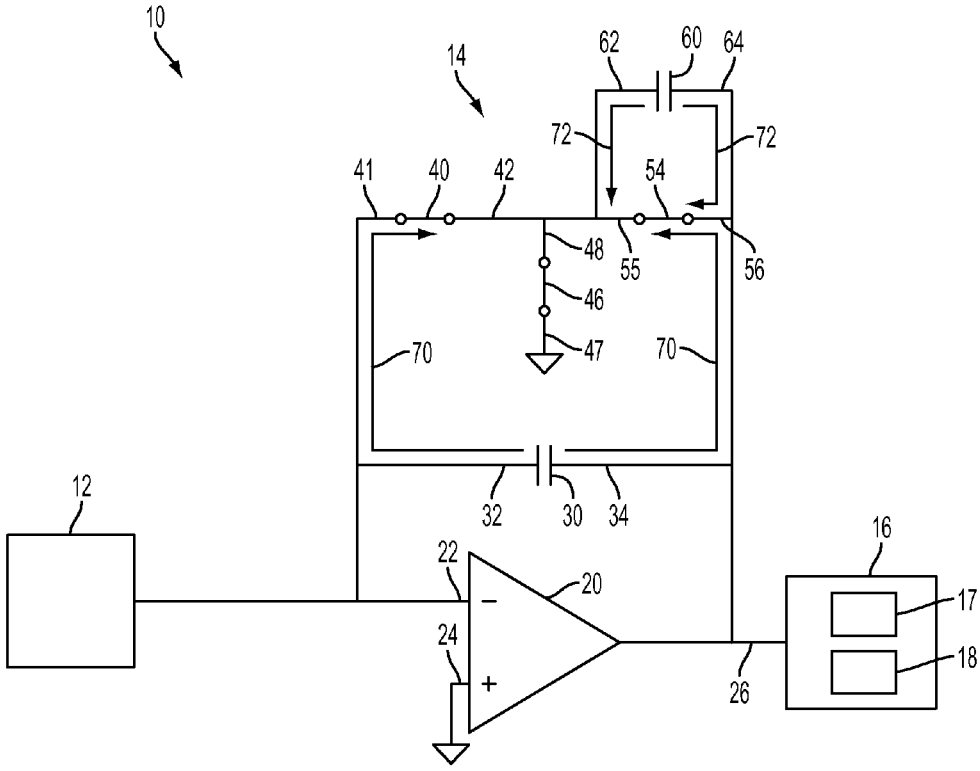
9 Claims, 5 Drawing Sheets