US009510856B2

(12) **United States Patent**
McClain et al.

(10) **Patent No.: US 9,510,856 B2**
(45) **Date of Patent: Dec. 6, 2016**

(54) **DRUG DELIVERY MEDICAL DEVICE**

(75) Inventors: **James B. McClain**, Raleigh, NC (US); **Charles Douglas Taylor**, Franklinton, NC (US); **John Neet**, Lawrence, KS (US); **Brett G. Zani**, Arlington, MA (US)

(73) Assignee: **Micell Technologies, Inc.**, Durham, NC (US)

(*) Notice: Subject to any disclaimer, the term of this patent is extended or adjusted under 35 U.S.C. 154(b) by 0 days.

(21) Appl. No.: **13/384,216**

(22) PCT Filed: **Jul. 16, 2010**

(86) PCT No.: **PCT/US2010/042355**

§ 371 (c)(1),
(2), (4) Date: **Mar. 20, 2012**

(87) PCT Pub. No.: **WO2011/009096**

PCT Pub. Date: **Jan. 20, 2011**

(65) **Prior Publication Data**

US 2012/0172787 A1 Jul. 5, 2012

Related U.S. Application Data

(60) Provisional application No. 61/226,239, filed on Jul. 16, 2009.

(51) **Int. Cl.**
A61M 31/00 (2006.01)
A61M 37/00 (2006.01)
(Continued)

(52) **U.S. Cl.**
CPC ***A61B 17/320725*** (2013.01); ***A61L 29/085*** (2013.01); ***A61L 29/16*** (2013.01);
(Continued)

(58) **Field of Classification Search**
CPC A61M 2025/1086; A61M 2025/105; A61M 25/104; A61M 25/10; A61M 2025/0057; A61M 2025/1031; A61B 17/320725; A61B 2017/00893; A61B 2017/22051; A61B 2017/22061; A61B 2017/22065; A61L 2300/416; A61L 2300/606; A61L 29/085; A61L 29/16; A61L 2300/602; A61L 2300/608; A61L 2300/63; A61L 2420/08; A61L 27/01
(Continued)

(56) **References Cited**

U.S. PATENT DOCUMENTS

3,087,860 A 4/1963 Endicott
3,123,077 A 3/1964 Alcamo
(Continued)

FOREIGN PATENT DOCUMENTS

CA 2237466 A1 11/1998
CA 2589761 12/2004
(Continued)

OTHER PUBLICATIONS

Akoh et al., "One-Stage Synthesis of Raffinose Fatty Acid Polyesters."Journal Food Science (1987) 52:1570.
(Continued)

Primary Examiner — Jason Flick
(74) *Attorney, Agent, or Firm* — Lerner, David, Littenberg, Krumholz & Mentlik, LLP

(57) **ABSTRACT**
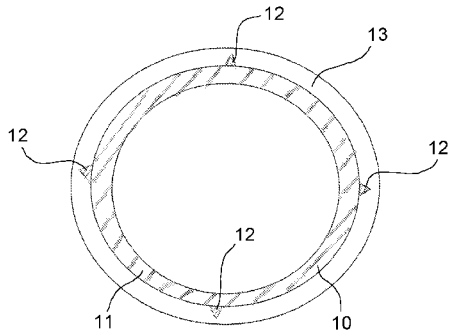
Provided is a coated implantable medical device, comprising: a substrate; and a coating disposed on the substrate, wherein the coating comprises at least one polymer and at least one pharmaceutical agent in a therapeutically desirable morphology and/or at least one active biological agent and optionally, one or more pharmaceutical carrying agents; wherein substantially all of pharmaceutical agent and/or active biological agent remains within the coating and on the
(Continued)