US009410856B2

(12) **United States Patent**
Kamiya et al.

(10) **Patent No.: US 9,410,856 B2**
(45) **Date of Patent: Aug. 9, 2016**

(54) **SENSOR DEVICE, SENSOR MODULE, FORCE DETECTION DEVICE, AND ROBOT**

(71) Applicant: **Seiko Epson Corporation**, Tokyo (JP)

(72) Inventors: **Toshiyuki Kamiya**, Fujimi (JP); **Hiroki Kawai**, Matsumoto (JP)

(73) Assignee: **Seiko Epson Corporation** (JP)

(*) Notice: Subject to any disclaimer, the term of this patent is extended or adjusted under 35 U.S.C. 154(b) by 121 days.

(21) Appl. No.: **13/967,575**

(22) Filed: **Aug. 15, 2013**

(65) **Prior Publication Data**

US 2014/0053660 A1 Feb. 27, 2014

(30) **Foreign Application Priority Data**

Aug. 22, 2012 (JP) 2012-182987

(51) **Int. Cl.**
G01L 1/16 (2006.01)
G01L 5/16 (2006.01)

(52) **U.S. Cl.**
CPC . ***G01L 1/16*** (2013.01); ***G01L 1/162*** (2013.01); ***G01L 5/167*** (2013.01); *Y10S 901/46* (2013.01)

(58) **Field of Classification Search**
CPC G01L 1/16; G01L 1/106; B25J 13/08; B25J 19/02; B62D 57/032
USPC 73/862.59, 862.68; 294/907; 901/46
See application file for complete search history.

(56) **References Cited**

U.S. PATENT DOCUMENTS

3,566,163	A	2/1971	Hans Fischer et al.	
4,620,436	A	11/1986	Hirabayashi et al.	
4,821,584	A *	4/1989	Lembke	73/862.68
5,297,430	A	3/1994	Sonderegger et al.	
7,004,035	B2	2/2006	Saito et al.	
8,869,632	B2 *	10/2014	Tsuchiya et al.	73/862.59
8,887,582	B2 *	11/2014	Suzuki	73/862.59
2012/0260745	A1	10/2012	Tsuchiya et al.	

FOREIGN PATENT DOCUMENTS

JP	39-018592	9/1964
JP	52-134482	11/1977
JP	61-090895 A	5/1986
JP	03-071029 A	3/1991
JP	04-231827	8/1992
JP	06-018341 A	1/1994
JP	06-050774	2/1994
JP	06-130079	5/1994
JP	2004-361308 A	12/2004
JP	2008-157628 A	7/2008
JP	2012-220462 A	11/2012
JP	2013-053985 A	3/2013

* cited by examiner

Primary Examiner — Lisa Caputo
Assistant Examiner — Octavia Hollington
(74) *Attorney, Agent, or Firm* — Harness, Dickey & Pierce, P.L.C.

(57) **ABSTRACT**

A package having a recessed section, a sensor element arranged in the recessed section and having a piezoelectric material, a lid joined to the package and sealing the recessed section of the package are provided. The package has a first hollow portion which a part of the sensor element fits with, on an inner bottom surface of the recessed section. The lid has a second hollow portion which a part of the sensor element fits with.
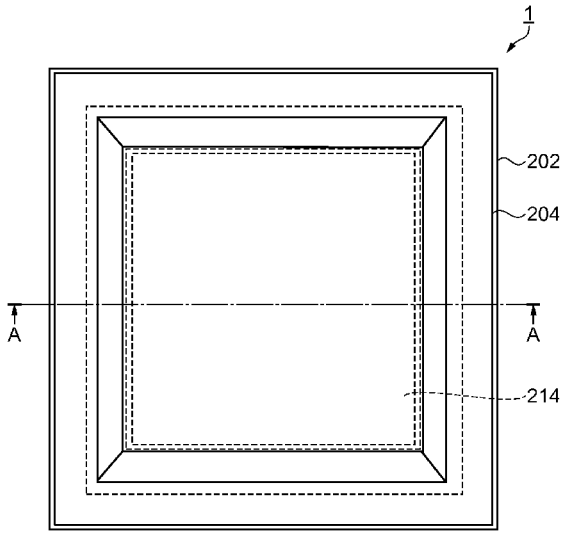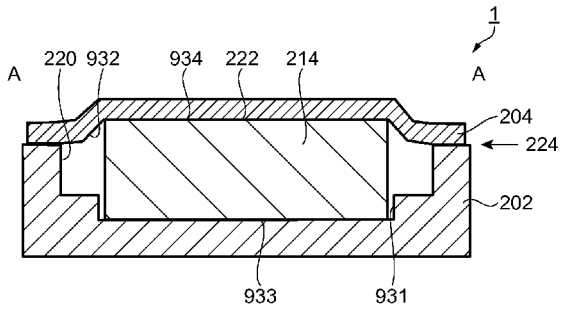
1 Claim, 11 Drawing Sheets