US009410756B2

(12) **United States Patent**
Gardner et al.

(10) **Patent No.: US 9,410,756 B2**
(45) **Date of Patent: Aug. 9, 2016**

(54) **GAS FLOW VOLUME CONTROL APPARATUS**

(71) Applicants: **Todd Conrad Gardner**, Winter Garden, FL (US); **Wyndell Todd Kern**, Winter Garden, FL (US)

(72) Inventors: **Todd Conrad Gardner**, Winter Garden, FL (US); **Wyndell Todd Kern**, Winter Garden, FL (US)

(*) Notice: Subject to any disclaimer, the term of this patent is extended or adjusted under 35 U.S.C. 154(b) by 0 days.

(21) Appl. No.: **14/643,948**

(22) Filed: **Mar. 10, 2015**

(65) **Prior Publication Data**

US 2015/0253091 A1 Sep. 10, 2015

Related U.S. Application Data

(60) Provisional application No. 61/950,295, filed on Mar. 10, 2014.

(51) **Int. Cl.**
F41A 5/20 (2006.01)
F41A 5/28 (2006.01)

(52) **U.S. Cl.**
CPC ***F41A 5/28*** (2013.01); ***F41A 5/20*** (2013.01)

(58) **Field of Classification Search**
CPC F41A 5/20; F41A 5/26; F41A 5/28; F41A 5/18; F41C 23/16
USPC 89/193, 129.01, 191.01, 191.02, 192; 124/56, 70–76
See application file for complete search history.

(56) **References Cited**

U.S. PATENT DOCUMENTS

3,527,194 A * 9/1970 Desrochers F41B 11/62 124/37
RE27,568 E * 1/1973 Vadas et al. F41B 11/62 124/37
5,768,818 A * 6/1998 Rustick F41A 5/26 42/75.02
5,945,626 A * 8/1999 Robbins F41A 5/26 42/111
7,610,844 B2 * 11/2009 Kuczynko F41A 5/28 89/193
7,856,917 B2 * 12/2010 Noveske F41A 5/28 89/193
8,596,185 B1 * 12/2013 Soong F41A 5/28 89/193
8,667,882 B1 * 3/2014 Larson F41A 3/66 89/140
8,960,069 B1 * 2/2015 Soong F41A 5/28 89/193
D742,990 S * 11/2015 Huang D22/108
9,335,106 B1 * 5/2016 Simon F41A 5/26
2010/0282066 A1 * 11/2010 Tankersley F41A 5/26 89/193
2011/0179945 A1 * 7/2011 Clark F41A 5/18 89/193
2011/0271827 A1 * 11/2011 Larson F41A 5/28 89/193
2012/0167757 A1 * 7/2012 Gomez F41A 5/28 89/193
2013/0098235 A1 * 4/2013 Reinken F41A 5/28 89/193
2014/0076149 A1 * 3/2014 Adams F41A 5/28 89/192
2014/0076150 A1 * 3/2014 Brinkmeyer F41A 5/28 89/193
2014/0224114 A1 * 8/2014 Faxon F41A 15/14 89/193
2015/0226503 A1 * 8/2015 Yollu F41A 5/28 89/193
2016/0047614 A1 * 2/2016 Larson, Jr. F41A 5/28 89/191.01

* cited by examiner

Primary Examiner — Michael David

(57) **ABSTRACT**

A gas flow volume control apparatus includes an adjustable gas block and a securing member as the securing member fixes the adjustable gas block onto a barrel of a firearm. The adjustable gas block is in fluid communication with the barrel so that generated gas of a propelling bullet can be recycled within a gas-operated reloading system. The generated gas is rerouted from the barrel to the gas-operated reloading system through a gas flow channel and a gas-tube channel of the adjustable gas block. An adjustment channel of the adjustable gas block also allows a user to control the rerouted amount of generated gas in order to optimize the performance of the firearm.
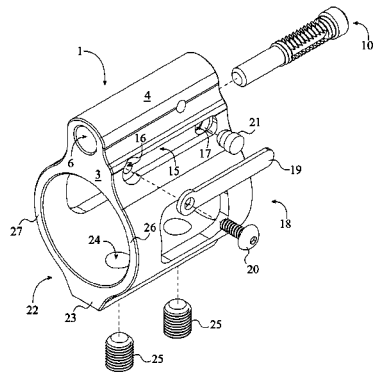
8 Claims, 8 Drawing Sheets