US009410656B2

(12) **United States Patent**
Murias et al.

(10) **Patent No.: US 9,410,656 B2**
(45) **Date of Patent: Aug. 9, 2016**

(54) **REINFORCED PLUG**

(71) Applicants: **Adrian Murias**, Mercer Island, WA (US); **Richard Tran**, Bothell, WA (US)

(72) Inventors: **Adrian Murias**, Mercer Island, WA (US); **Richard Tran**, Bothell, WA (US)

(73) Assignee: **PACCAR Inc**, Bellevue, WA (US)

(*) Notice: Subject to any disclaimer, the term of this patent is extended or adjusted under 35 U.S.C. 154(b) by 127 days.

(21) Appl. No.: **13/789,223**

(22) Filed: **Mar. 7, 2013**

(65) **Prior Publication Data**

US 2014/0252016 A1 Sep. 11, 2014

(51) **Int. Cl.**

B29C 53/56	(2006.01)
F16L 55/11	(2006.01)
F16L 55/115	(2006.01)
B25B 5/14	(2006.01)

(52) **U.S. Cl.**

CPC ***F16L 55/1141*** (2013.01); ***B25B 5/147*** (2013.01); ***F16L 55/115*** (2013.01); *Y10T 29/49826* (2015.01); *Y10T 29/49872* (2015.01)

(58) **Field of Classification Search**

CPC B29C 53/56; B29C 53/60; B29C 53/58; B29C 53/602; B29C 53/8066; B29C 53/0075; B29C 2053/8025

USPC 156/184, 161–162, 165–166, 169, 173, 156/229, 307.1; 264/257

See application file for complete search history.

(56) **References Cited**

U.S. PATENT DOCUMENTS

1,726,166	A		8/1929	Sparks
2,385,055	A		9/1945	Breslove
2,551,834	A		5/1951	Ferguson
2,644,978	A		7/1953	Becker
2,889,089	A		6/1959	Herrick et al.
3,077,904	A		2/1963	Rusche
3,080,787	A		3/1963	Bertelsmann
3,082,485	A		3/1963	Thomas
3,157,056	A		11/1964	Gray
3,448,772	A		6/1969	Delamater
3,466,067	A		9/1969	Orain
3,476,154	A		11/1969	Ludeman
3,574,312	A		4/1971	Miller
3,606,073	A		9/1971	Burke
3,807,457	A		4/1974	Logsdon
3,813,098	A		5/1974	Fischer et al.
3,938,237	A		2/1976	Dunz
4,425,945	A		1/1984	McDonald
4,952,429	A		8/1990	Schmitz
5,004,016	A		4/1991	Kliewer
5,028,056	A		7/1991	Bemis
5,044,404	A		9/1991	Watson
5,224,515	A		7/1993	Foster et al.
5,252,165	A	*	10/1993	Fecto et al. 156/228
5,287,892	A		2/1994	Sanderson et al.
5,318,075	A		6/1994	Roll
5,379,802	A		1/1995	VanderLans
5,520,219	A		5/1996	Hessian
5,534,318	A		7/1996	Andre De La Porte

(Continued)

Primary Examiner — Christina Johnson
Assistant Examiner — Xue Liu
(74) *Attorney, Agent, or Firm* — Christensen O'Connor Johnson Kindness PLLC

(57) **ABSTRACT**

A method includes providing a die having a cylindrical body terminating in a rounded end, wrapping a fibrous material around the die while the fibrous material is tensioned, wherein the fibrous material is placed to extend in a continuous manner across the width of the rounded end of the body and to opposite sides of the cylindrical body, applying a curable resin on the die, curing the resin, and removing a reinforced cured resin plug from the die.
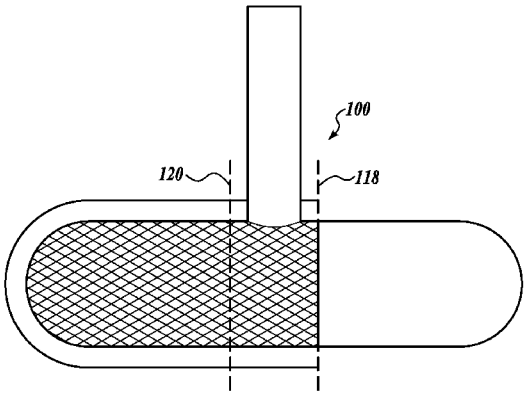
10 Claims, 5 Drawing Sheets