US009409656B2

(12) **United States Patent**
Ohtomo et al.

(10) **Patent No.: US 9,409,656 B2**
(45) **Date of Patent: Aug. 9, 2016**

(54) **AERIAL PHOTOGRAPHING SYSTEM**

(71) Applicant: **Kabushiki Kaisha TOPCON**, Itabashi-ku, Tokyo-to (JP)

(72) Inventors: **Fumio Ohtomo**, Asaka (JP); **Hitoshi Otani**, Tokyo-to (JP); **Kazuki Osaragi**, Tokyo-to (JP); **Tetsuji Anai**, Tokyo-to (JP)

(73) Assignee: **Kabushiki Kaisha TOPCON**, Tokyo-to (JP)

(*) Notice: Subject to any disclaimer, the term of this patent is extended or adjusted under 35 U.S.C. 154(b) by 166 days.

(21) Appl. No.: **14/188,846**

(22) Filed: **Feb. 25, 2014**

(65) **Prior Publication Data**

US 2014/0240498 A1 Aug. 28, 2014

(30) **Foreign Application Priority Data**

Feb. 28, 2013 (JP) 2013-038901

(51) **Int. Cl.**

H04N 7/18	(2006.01)
B64D 47/08	(2006.01)
G01C 11/02	(2006.01)
G01C 15/00	(2006.01)

(52) **U.S. Cl.**

CPC ***B64D 47/08*** (2013.01); ***G01C 11/02*** (2013.01); ***G01C 15/00*** (2013.01); ***H04N 7/185*** (2013.01)

(58) **Field of Classification Search**

None

See application file for complete search history.

(56) **References Cited**

U.S. PATENT DOCUMENTS

6,369,755	B1	4/2002	Nichols et al.	
6,732,051	B1	5/2004	Kirk et al.	
7,071,970	B2 *	7/2006	Benton	G01C 21/20 348/207.99
7,804,996	B2	9/2010	Ohtomo et al.	
7,982,665	B2	7/2011	Kumagai et al.	
8,265,817	B2	9/2012	Tener et al.	
8,736,819	B2	5/2014	Nagai	
9,073,637	B2	7/2015	Ohtomo et al.	
9,201,422	B2	12/2015	Ohtomo et al.	
2002/0185618	A1	12/2002	Ohishi et al.	
2004/0246461	A1	12/2004	Ohtomo et al.	
2005/0286760	A1	12/2005	Ohtomo et al.	
2006/0271263	A1	11/2006	Self et al.	
2007/0265728	A1	11/2007	Marsh et al.	
2008/0075325	A1	3/2008	Otani et al.	
2010/0033371	A1	2/2010	Kumagai et al.	

(Continued)

FOREIGN PATENT DOCUMENTS

CA	2832956	A1	10/2012
EP	0051913	A1	5/1982

(Continued)

OTHER PUBLICATIONS

European communication mailed Feb. 6, 2015 in co-pending European patent application No. 14171346.1.

(Continued)

Primary Examiner — Heather Jones

(74) *Attorney, Agent, or Firm* — Nields, Lemack & Frame, LLC

(57) **ABSTRACT**

An aerial photographing system, comprising a flying vehicle being remotely controlled, a camera (**7**, **8**) tiltably supported in any direction via a gimbal (**25**), a retro-reflector (**9**) tilting integrally with the camera, being set in a known relation with the camera and used as an object to be measured, and a total station (**3**) for tracking the retro-reflector and for measuring position of the retro-reflector.
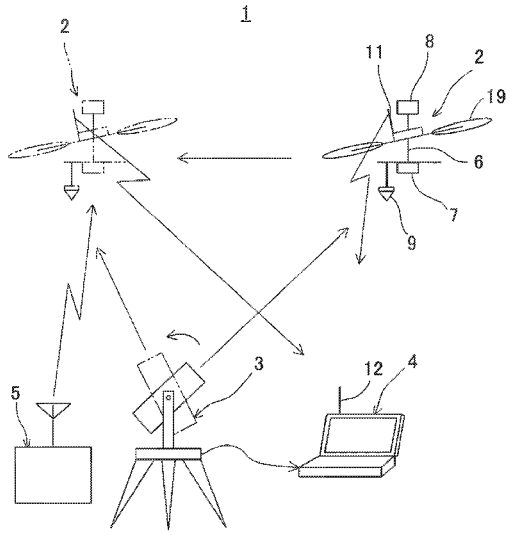
6 Claims, 6 Drawing Sheets