US009409456B1

(12) **United States Patent**
Mariansky

(10) **Patent No.: US 9,409,456 B1**
(45) **Date of Patent: Aug. 9, 2016**

(54) **VEHICLE TIRE CHAIN APPARATUS**

(71) Applicant: **Reynaldo Mariansky**, Sacramento, CA (US)

(72) Inventor: **Reynaldo Mariansky**, Sacramento, CA (US)

(*) Notice: Subject to any disclaimer, the term of this patent is extended or adjusted under 35 U.S.C. 154(b) by 0 days.

(21) Appl. No.: **14/723,561**

(22) Filed: **May 28, 2015**

(51) **Int. Cl.**
B60C 27/06 (2006.01)
B60C 27/08 (2006.01)
B60C 27/00 (2006.01)
B60C 27/20 (2006.01)

(52) **U.S. Cl.**
CPC ***B60C 27/068*** (2013.04); ***B60C 27/003*** (2013.04); ***B60C 27/062*** (2013.04); ***B60C 27/08*** (2013.01); ***B60C 27/20*** (2013.01)

(58) **Field of Classification Search**
CPC .. B60C 27/003; B60C 27/061; B60C 27/062; B60C 27/068; B60C 27/08; B60C 27/20
USPC ..... 152/223, 225 R, 226, 227, 228, 229, 152/230, 219, 209.26
See application file for complete search history.

(56) **References Cited**

U.S. PATENT DOCUMENTS

1,293,528 A * 2/1919 Palmer B60C 1/0016 152/158
1,454,054 A * 5/1923 Kepler B60C 27/08 152/221
1,566,938 A * 12/1925 Walty B60C 27/08 152/228
1,655,508 A * 1/1928 Odean B60C 27/08 152/210
1,742,942 A * 1/1930 Thompson B60C 27/08 152/227
1,952,944 A 3/1934 Ruffertshofer
2,013,064 A 9/1935 Panzica
2,276,640 A 3/1942 Ansel
2,687,760 A * 8/1954 Gudalis B60C 27/12 152/218
2,952,290 A * 9/1960 Gaspardo B60C 27/08 152/208
3,295,582 A 1/1967 Hernikl
3,955,610 A 5/1976 Freeman
4,274,463 A 6/1981 Freeman
4,334,566 A * 6/1982 Augustine B60C 27/16 152/208
5,236,026 A 8/1993 Springer
5,255,577 A 10/1993 Keefauver
5,285,834 A * 2/1994 Givens B60C 27/06 152/208
8,141,605 B2 * 3/2012 Park ..... B60C 27/22 152/213 R
8,162,017 B2 4/2012 Miller
2003/0173011 A1 * 9/2003 Tsuda B60C 17/0009 152/209.26
2006/0144493 A1 * 7/2006 Kaufman ..... B60C 27/16 152/225 R
2011/0220262 A1 * 9/2011 Winton B60C 27/06 152/228

* cited by examiner

Primary Examiner — Kip T Kotter
(74) *Attorney, Agent, or Firm* — Thomas R. Lampe

(57) **ABSTRACT**

Tire chain apparatus includes chains having a first set of links disposed parallel to the tread and a second set of links projecting outwardly away from the tread, with at least some of the second set of links in tread grooves. Rigid cross member road engaging structures extend across the tread through the chains and have outwardly projecting road engaging protrusions.
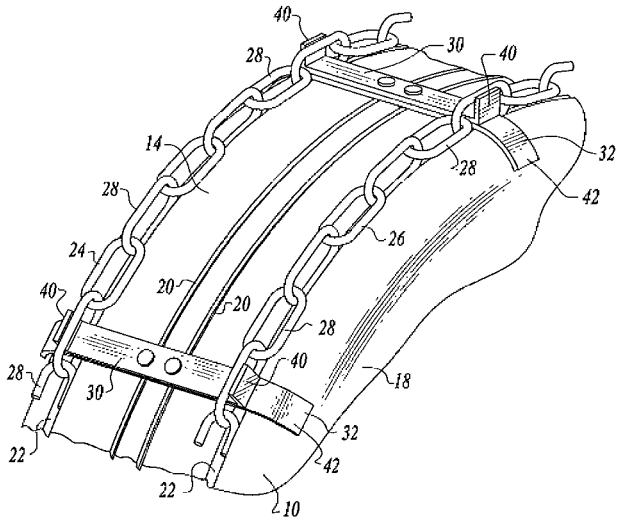
12 Claims, 3 Drawing Sheets