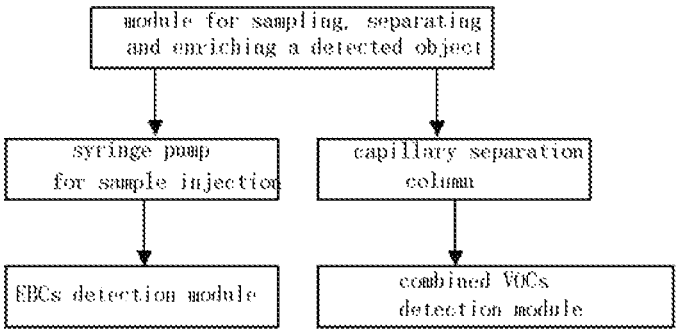
module for sampling, separating and enriching a detected object
syringe pump for sample injection
capillary separation column
EBCs detection module
combined VOCs detection module

Fig. 1

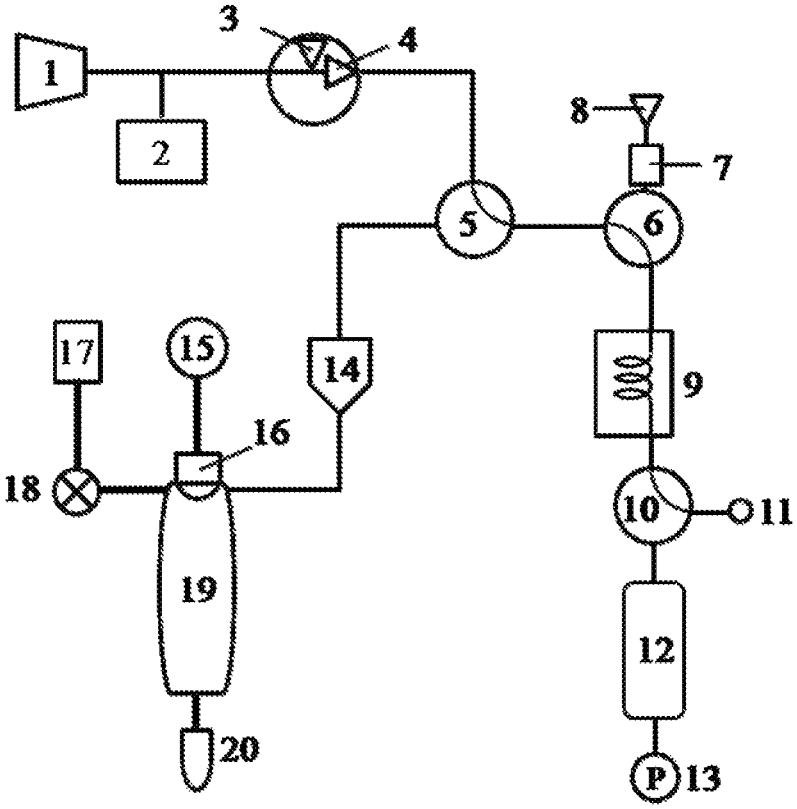
1
2
3
4
5
6
7
8
9
10
11
12
13
P
14
15
16
17
18
19
20

Fig. 2