Aug. 6, 1963 L. M. NASH 3,099,855

CLEANING IMPLEMENT

Filed Feb. 1, 1962 2 Sheets-Sheet 1

Fig. 1.

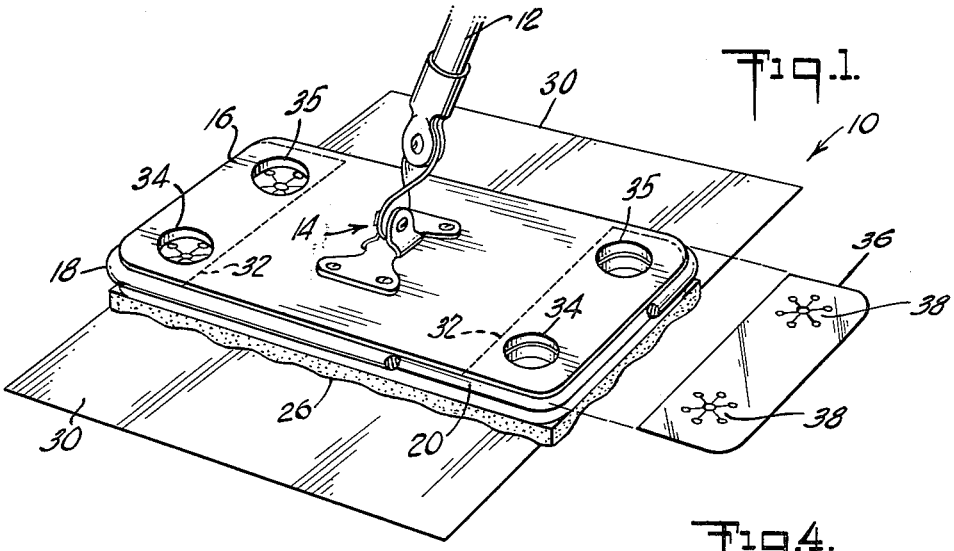

Fig. 2.

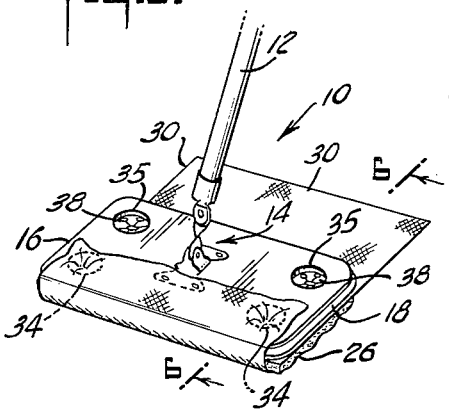

Fig. 4.

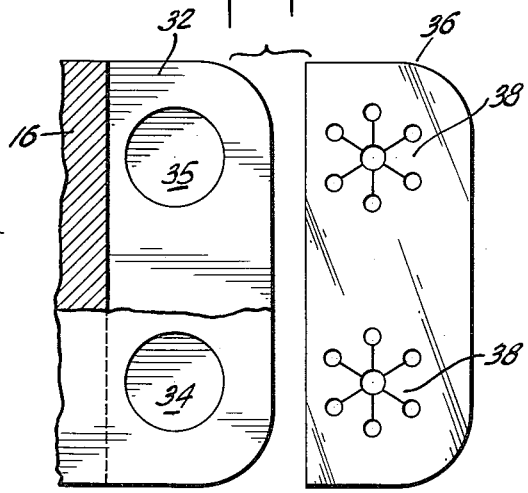

Fig. 3.

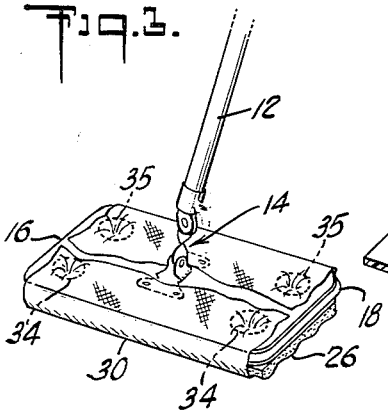

Fig. 5.

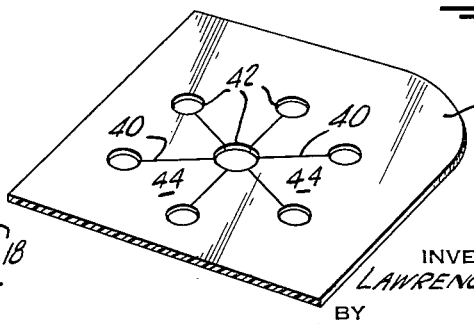

INVENTOR
LAWRENCE M. NASH
BY
Alexander T. Kardos
ATTORNEY