OIL MIST LUBRICATING SYSTEM

Filed July 17, 1968 2 Sheets-Sheet 2

Fig. 2

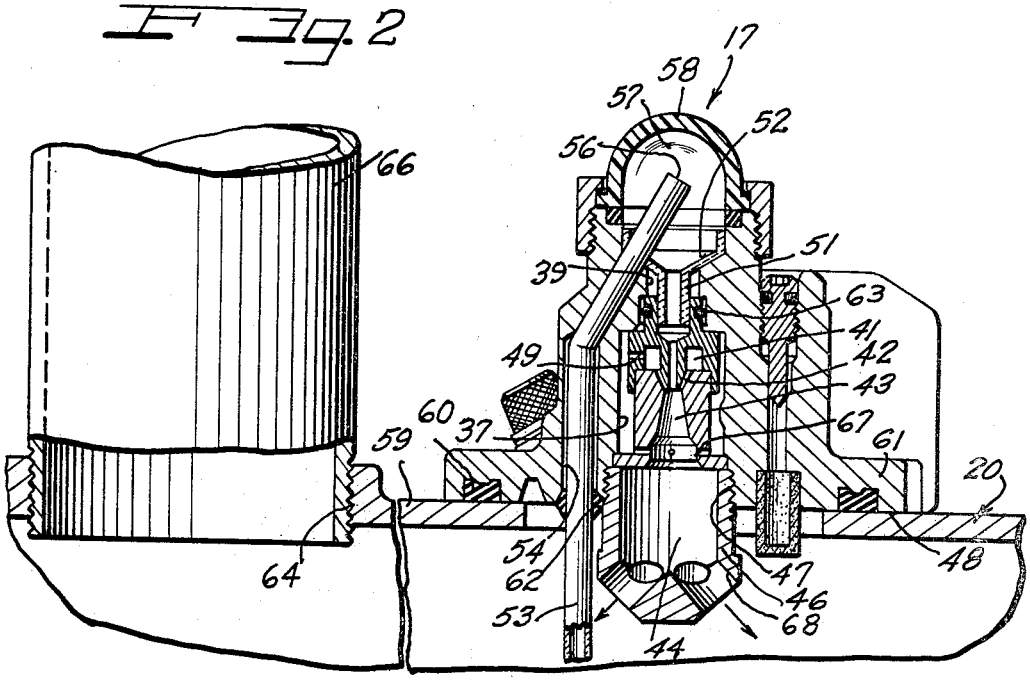

Fig. 3

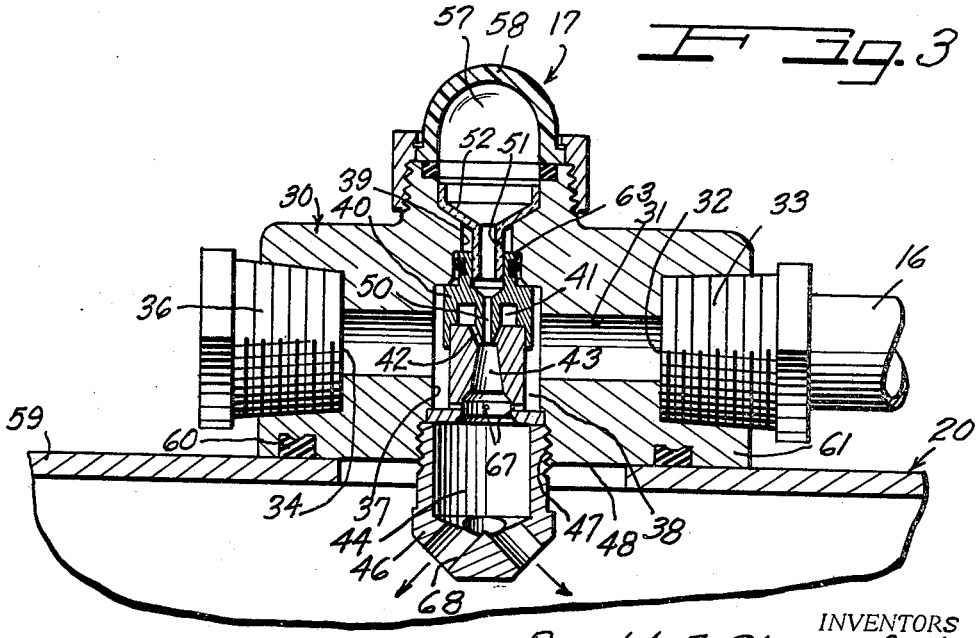

INVENTORS
Ronald F. Obergefell
Geza A. Thiry

BY Hill, Sherman, Meroni, Gross & Simpson ATTORNEYS