(No Model.)

R. M. HUNTER.

ELECTRIC RAILWAY.

No. 385,055. Patented June 26, 1888.

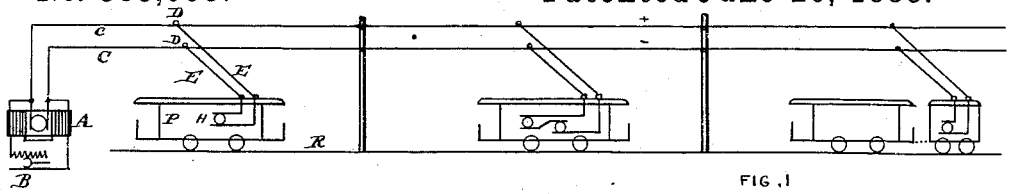

FIG. 1

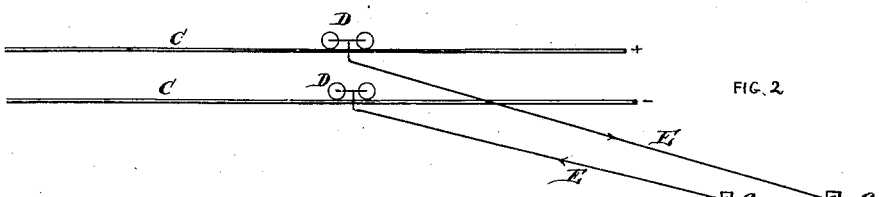

FIG. 2

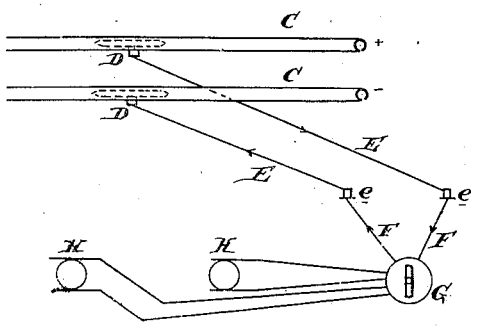

FIG. 3

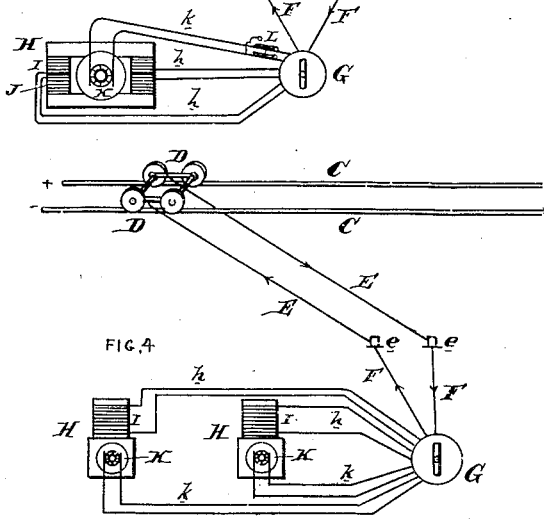

FIG. 4

FIG. 5

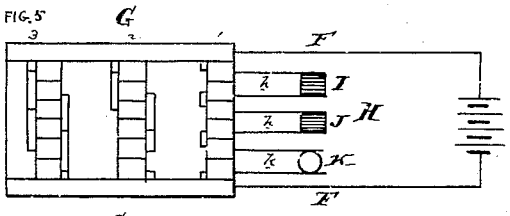

FIG. 6

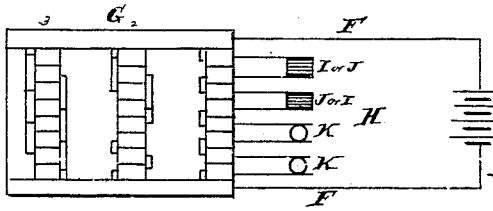

Attest
Henry Drury
E. M. Buckingham

Inventor
R. M. Hunter