US006282655B1

(12) **United States Patent**
Given

(10) **Patent No.: US 6,282,655 B1**
(45) **Date of Patent: Aug. 28, 2001**

(54) **KEYBOARD MOTION DETECTOR**

(76) Inventor: **Paul Given**, 2504 S. Fenton La., Lakewood, CO (US) 80277

(*) Notice: Subject to any disclaimer, the term of this patent is extended or adjusted under 35 U.S.C. 154(b) by 0 days.

(21) Appl. No.: **09/414,732**

(22) Filed: **Oct. 8, 1999**

Related U.S. Application Data

(60) Provisional application No. 60/135,807, filed on May 24, 1999.

(51) **Int. Cl.**[7] **G06F 11/30**

(52) **U.S. Cl.** **713/200**; 340/540

(58) **Field of Search** 713/200, 201, 713/202, 300, 320, 323; 340/541, 540; 348/143, 155, 156, 634; 382/107

(56) **References Cited**

U.S. PATENT DOCUMENTS

5,202,929 * 4/1993 Lemelson 382/116
5,281,961 * 1/1994 Elwell 340/825
5,544,321 * 8/1996 Theimer et al. 709/226
5,548,660 * 8/1996 Lemelson 382/116
5,555,376 * 9/1996 Theimer et al. 709/229
5,635,905 * 6/1997 Blackburn et al. 340/555
5,835,083 * 11/1998 Nielson et al. 345/211
5,926,404 * 7/1999 Zeller et al. 713/321
5,958,055 * 9/1999 Evoy et al. 713/310
5,960,085 * 9/1999 De La Huegra 713/182
6,002,427 * 12/1999 Kipust 348/156

* cited by examiner

Primary Examiner—Norman M. Wright
Assistant Examiner—Christopher Reyak
(74) *Attorney, Agent, or Firm*—Harold A. Burdick

(57) **ABSTRACT**

The invention is a computer interface utilizing a sensor for sensing that a user is in the immediate vicinity of the computer. The interface consists of a motion sensor, computer software for enabling the computer security in the absence or presence of a user, a keyboard interface connected to the motion sensor and a keyboard connected to the keyboard interface.
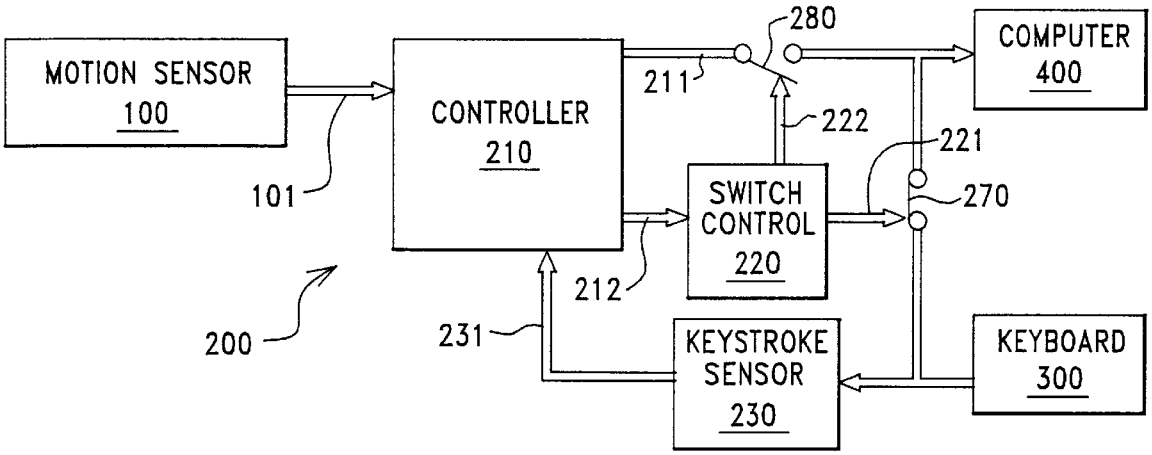
14 Claims, 1 Drawing Sheet