Oct. 16, 1934. G. MacLEAN 1,976,955

FLUID TREATING APPARATUS

Filed Dec. 16, 1931 2 Sheets-Sheet 1

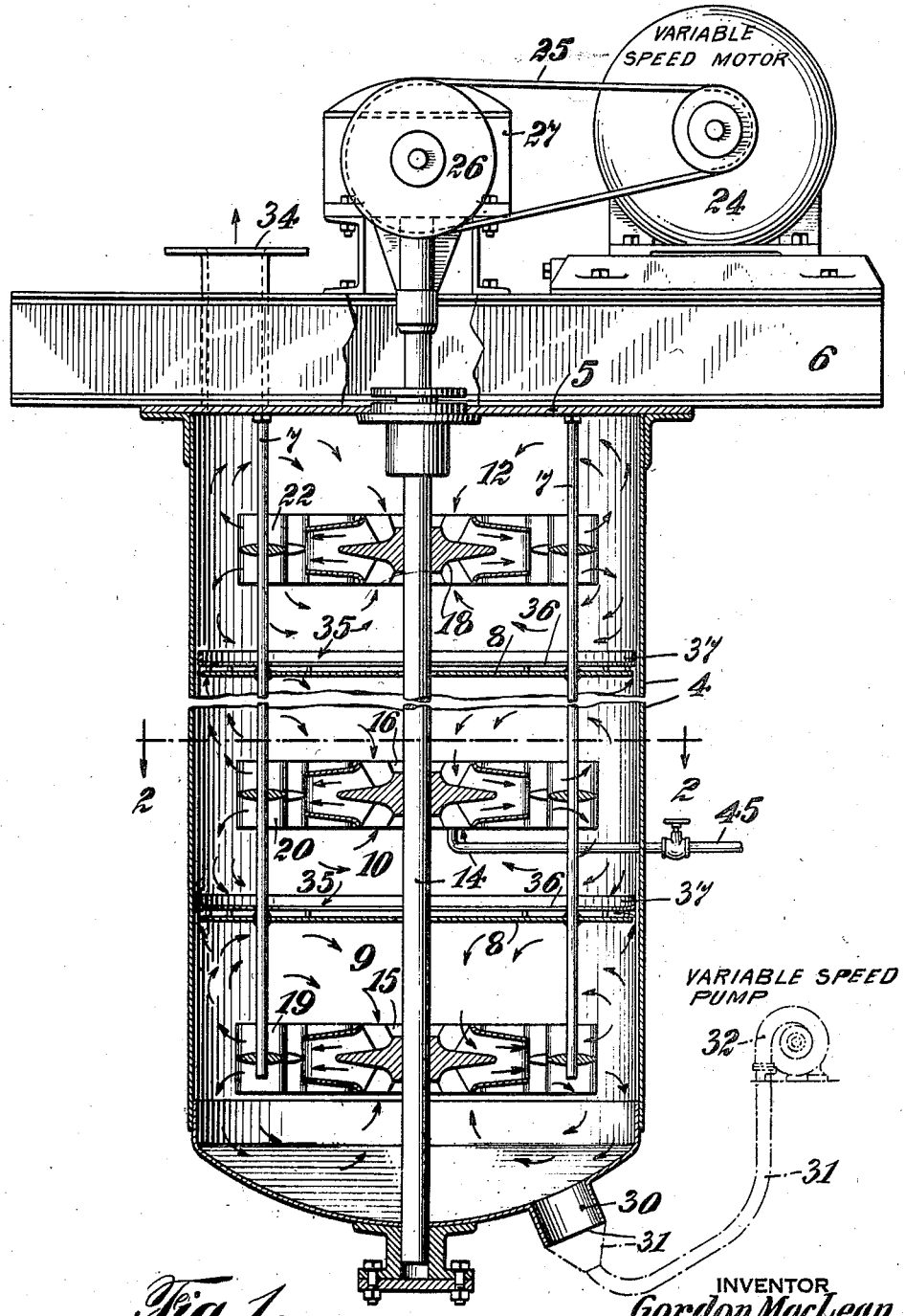

Fig. 1.

INVENTOR
Gordon MacLean
BY
Ramsey & Kent
his ATTORNEYS