US008453455B2

(12) **United States Patent**
Bastnagel et al.

(10) **Patent No.: US 8,453,455 B2**
(45) **Date of Patent: Jun. 4, 2013**

(54) **PANELED COMBUSTION LINER HAVING NODES**

(75) Inventors: **Philip M. Bastnagel**, Indianapolis, IN (US); **Jack Petty**, Indianapolis, IN (US)

(73) Assignee: **Rolls-Royce Corporation**, Indianapolis, IN (US)

(*) Notice: Subject to any disclaimer, the term of this patent is extended or adjusted under 35 U.S.C. 154(b) by 542 days.

(21) Appl. No.: **12/642,215**

(22) Filed: **Dec. 18, 2009**

(65) **Prior Publication Data**

US 2010/0162716 A1 Jul. 1, 2010

Related U.S. Application Data

(60) Provisional application No. 61/203,811, filed on Dec. 29, 2008.

(51) **Int. Cl.**
F02C 1/00 (2006.01)
F02G 3/00 (2006.01)

(52) **U.S. Cl.**
USPC **60/752**; 60/753; 60/754; 60/755; 60/756; 60/757; 60/758; 60/759; 60/760

(58) **Field of Classification Search**
USPC 60/752–760; 110/336–340
See application file for complete search history.

(56) **References Cited**

U.S. PATENT DOCUMENTS

2,919,549	A *	1/1960	Haworth et al.	60/753
4,642,993	A	2/1987	Sweet	
4,749,029	A *	6/1988	Becker et al.	165/47
4,832,999	A *	5/1989	Sweet	428/116
5,323,601	A	6/1994	Jarrell et al.	
5,333,443	A *	8/1994	Halila	60/796
5,380,579	A *	1/1995	Bianchi	428/184
5,408,826	A *	4/1995	Stewart et al.	60/226.1
5,596,870	A *	1/1997	Dillard et al.	60/782
6,223,538	B1 *	5/2001	Benz et al.	60/753
6,438,958	B1	8/2002	McCaffrey et al.	
6,530,225	B1	3/2003	Hadder	
6,543,233	B2	4/2003	Young et al.	
6,606,861	B2	8/2003	Snyder	
6,655,146	B2	12/2003	Kutter et al.	
6,675,582	B2	1/2004	Monty et al.	
6,751,961	B2	6/2004	Pacheco-Tougas et al.	
2002/0066273	A1	6/2002	Kitamura et al.	
2002/0178728	A1	12/2002	McCaffrey et al.	
2003/0213249	A1	11/2003	Pacheco-Tougas et al.	
2005/0022531	A1	2/2005	Burd	
2005/0050896	A1	3/2005	McMasters	
2005/0086940	A1	4/2005	Coughlan, III et al.	
2006/0059916	A1 *	3/2006	Cheung et al.	60/752
2011/0016869	A1 *	1/2011	Iwasaki	60/752

* cited by examiner

Primary Examiner — Ehud Gartenberg
Assistant Examiner — Craig Kim
(74) *Attorney, Agent, or Firm* — Krieg DeVault LLP

(57) **ABSTRACT**

The present invention relates to combustors, and provides a combustion liner that may at least partially contain a combustion process. The combustion liner may include a support structure that supports a plurality of panels. The panels may be in the form of thermal barrier panels, e.g., that are attached to the support structure and/or other parts of the machine.
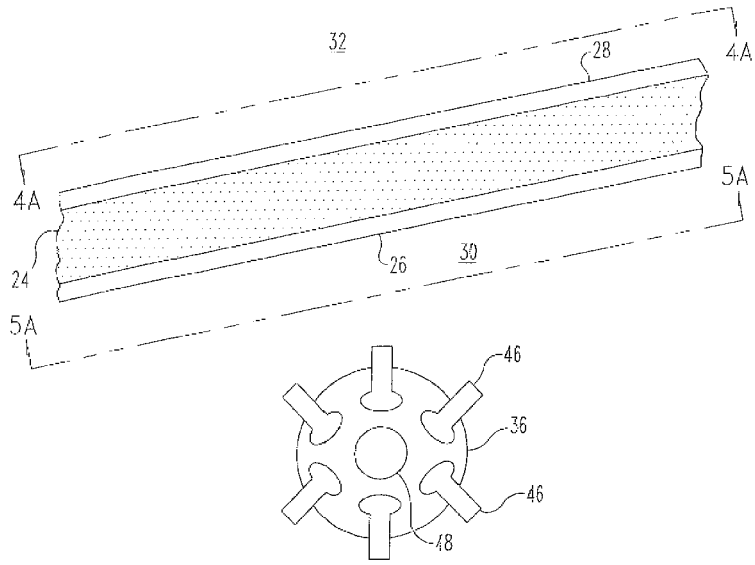
23 Claims, 4 Drawing Sheets