US008646655B2

(12) **United States Patent**
Wegelin et al.

(10) **Patent No.: US 8,646,655 B2**
(45) **Date of Patent: Feb. 11, 2014**

(54) **METHODS FOR RESETTING STALLED PUMPS IN ELECTRONICALLY CONTROLLED DISPENSING SYSTEMS**

(75) Inventors: **Jackson W. Wegelin**, Stow, OH (US); **Robert L. Quinlan, Jr.**, Stow, OH (US)

(73) Assignee: **Gojo Industries, Inc.**, Akron, OH (US)

(*) Notice: Subject to any disclaimer, the term of this patent is extended or adjusted under 35 U.S.C. 154(b) by 1046 days.

(21) Appl. No.: **12/616,798**

(22) Filed: **Nov. 12, 2009**

(65) **Prior Publication Data**

US 2011/0108578 A1 May 12, 2011

(51) **Int. Cl.**
B67D 7/14 (2010.01)
B67D 7/06 (2010.01)
B67D 3/00 (2006.01)

(52) **U.S. Cl.**
USPC **222/52**; 222/23; 222/181.3; 222/504; 222/325

(58) **Field of Classification Search**
USPC 222/41, 1, 23, 52, 63, 181.3, 181.1, 222/181.2, 321.1, 321.7, 333, 504, 325, 222/402.1
See application file for complete search history.

(56) **References Cited**

U.S. PATENT DOCUMENTS

4,722,372	A *	2/1988	Hoffman et al.	.....	141/98
5,226,566	A *	7/1993	Brandenburg	.....	222/180
5,605,251	A *	2/1997	Retti	.....	222/1
5,829,636	A	11/1998	Vuong et al.	.....	222/63
5,836,482	A	11/1998	Ophardt et al.	.....	222/325
5,908,140	A	6/1999	Muderlak et al.	.....	222/1
6,394,310	B1	5/2002	Muderlak et al.	.....	222/1
6,431,400	B1 *	8/2002	O'Maley et al.	.....	222/41
6,467,651	B1	10/2002	Muderlak et al.	.....	222/52
6,651,851	B2	11/2003	Muderlak et al.	.....	222/333
6,929,150	B2	8/2005	Muderlak et al.	.....	222/1
7,497,297	B2	3/2009	Watson et al.	.....	180/248
7,611,030	B2 *	11/2009	Reynolds et al.	.....	222/1
7,621,426	B2 *	11/2009	Reynolds et al.	.....	222/325
7,909,209	B2 *	3/2011	Reynolds et al.	.....	222/41
2002/0166871	A1	11/2002	Muderlak et al.	.....	222/23

(Continued)

FOREIGN PATENT DOCUMENTS

EP 1 671 568 A2 12/2005 ..... A14K 5/12

OTHER PUBLICATIONS

International Search Report in corresponding application No. PCT/US2012/046835 mailed Nov. 7, 2012.

(Continued)

Primary Examiner — Kevin P Shaver
Assistant Examiner — Stephanie E Williams
(74) *Attorney, Agent, or Firm* — Renner Kenner Greive Bobak Taylor & Weber

(57) **ABSTRACT**

Various methods are disclosed for resetting a stalled pump in a fluid dispensing system. In one embodiment, it is determined whether a refill container is received in the dispensing system and then a pump actuator is moved to a loading position when the refill container is removed. Another method sets a run timer, starts a pump actuator, determines whether the pump actuator is still dispensing fluid from the fluid dispensing system upon lapsing of the run timer and then moves the pump actuator if the pump actuator is still dispensing upon the expiration of the run timer. And another method detects opening of a cover, energizes a motor to move an actuator to a loading position, determines when the actuator is at the loading position and then turns the motor off.
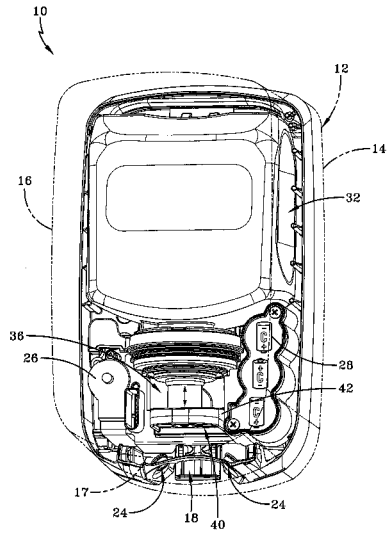
18 Claims, 5 Drawing Sheets