April 29, 1969 R. S. BROWN 3,441,355

PRESSURE-SUPPLIED PAINT ROLLER

Filed May 12, 1967

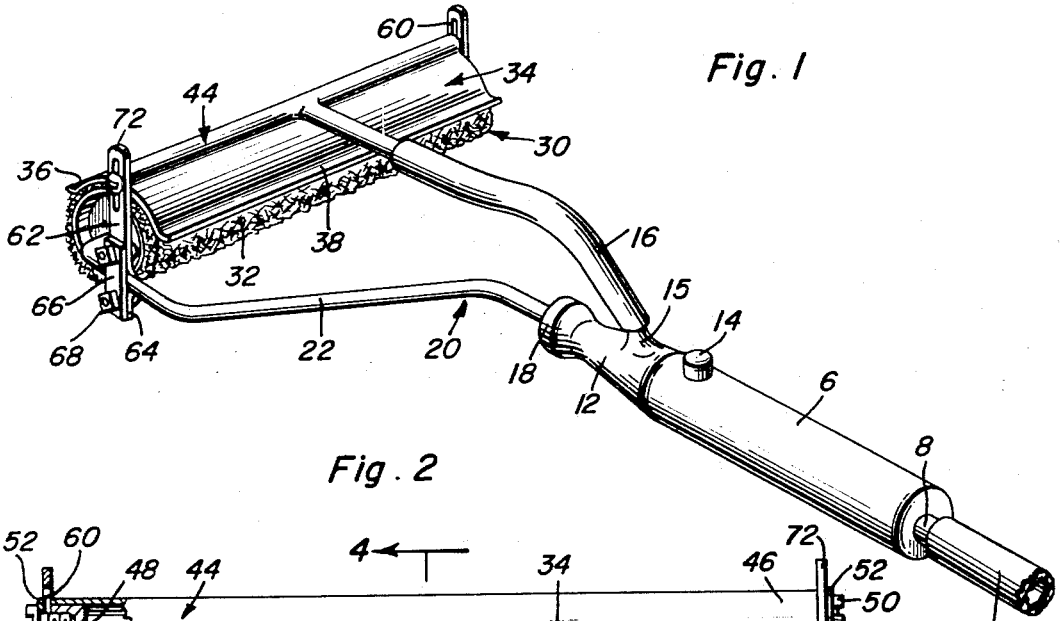

Fig. 1

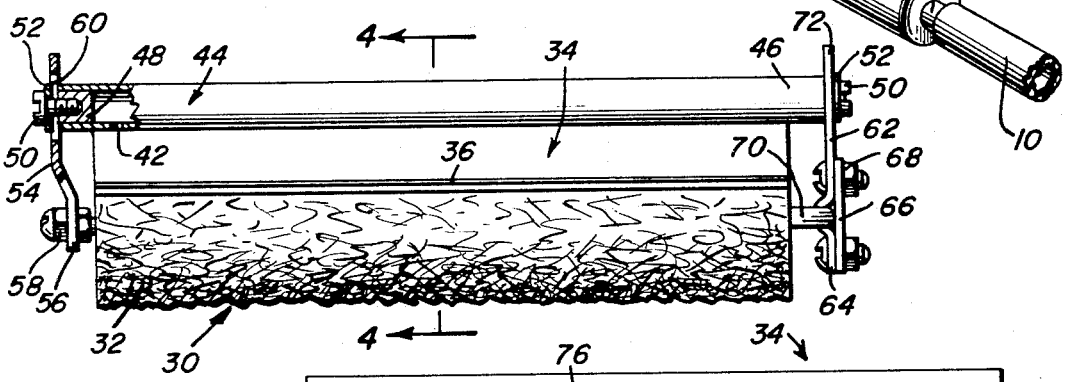

Fig. 2

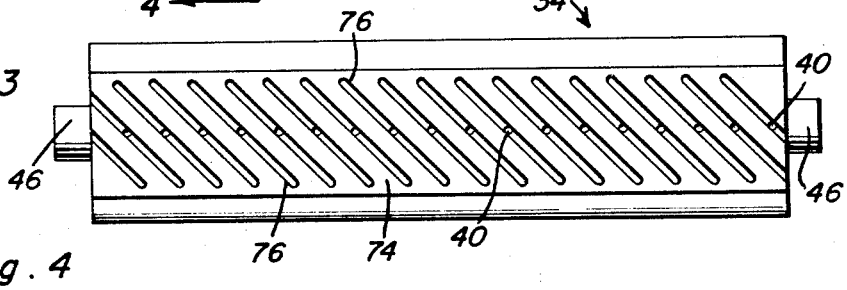

Fig. 3

Fig. 4

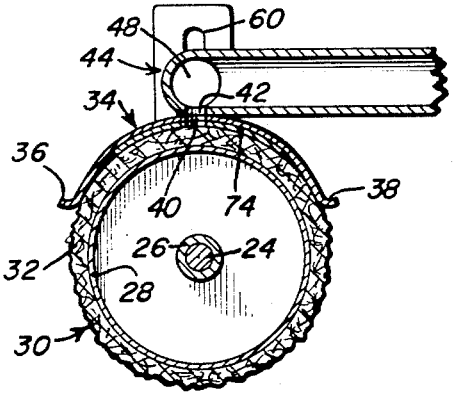

Roger S. Brown
INVENTOR.

BY Clarence A. O'Brien and Harvey B. Jacobson
Attorneys