US009638455B2

(12) **United States Patent**
Kim et al.

(10) **Patent No.: US 9,638,455 B2**
(45) **Date of Patent: May 2, 2017**

(54) **REFRIGERATOR AND METHOD FOR OPERATING THE SAME**

(71) Applicant: **LG ELECTRONICS INC.**, Seoul (KR)

(72) Inventors: **Seojung Kim**, Seoul (KR); **Yonghwan Eom**, Seoul (KR); **Kyeongyun Kim**, Seoul (KR)

(73) Assignee: **LG Electronics Inc.**, Seoul (KR)

(*) Notice: Subject to any disclaimer, the term of this patent is extended or adjusted under 35 U.S.C. 154(b) by 511 days.

(21) Appl. No.: **14/101,836**

(22) Filed: **Dec. 10, 2013**

(65) **Prior Publication Data**

US 2014/0157800 A1 Jun. 12, 2014

(30) **Foreign Application Priority Data**

Dec. 10, 2012 (KR) 10-2012-0142857

(51) **Int. Cl.**
F25D 21/06 (2006.01)
F25D 21/00 (2006.01)
F25D 21/08 (2006.01)

(52) **U.S. Cl.**
CPC ***F25D 21/002*** (2013.01); ***F25D 21/006*** (2013.01); ***F25D 21/08*** (2013.01)

(58) **Field of Classification Search**
CPC F25D 21/002; F25D 21/006; F25D 21/08
See application file for complete search history.

(56) **References Cited**

U.S. PATENT DOCUMENTS

4,332,138 A * 6/1982 Nakagawa F25B 5/04 62/199
4,569,205 A * 2/1986 Dempou F25D 11/022 62/155
4,808,009 A * 2/1989 Sittler ..... F25D 21/02 338/22 SD
6,314,745 B1 * 11/2001 Janke F25C 5/005 62/137
2011/0185755 A1 8/2011 Kim et al.

FOREIGN PATENT DOCUMENTS

CN 101988839 A 3/2011
EP 2 426 443 A2 3/2012
GB 2 340 922 A 3/2000

* cited by examiner

Primary Examiner — Larry Furdge
(74) *Attorney, Agent, or Firm* — Birch, Stewart, Kolasch & Birch, LLP

(57) **ABSTRACT**

A refrigerator including an evaporator to carry out heat exchange, a frost sensing unit to sense an amount of frost formed on the frost sensing unit, and a heater to be operated for removing the frost from the frost sensing unit is provided. The heater is operated in at least a portion of a defrosting section. Methods for operating the refrigerator are also provided.
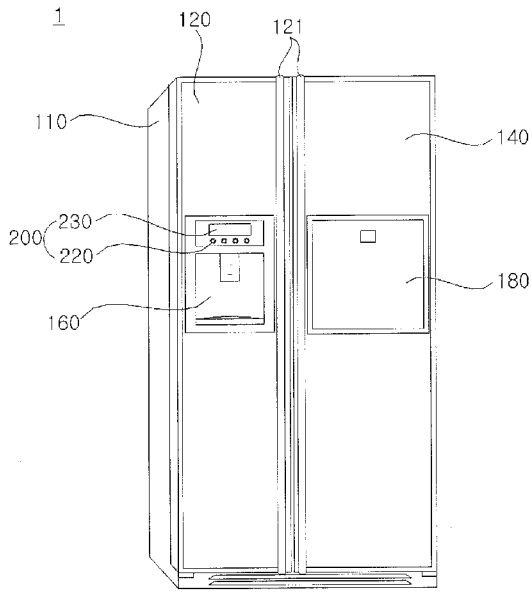
15 Claims, 12 Drawing Sheets