US009638355B2

(12) **United States Patent**
Thoman

(10) **Patent No.: US 9,638,355 B2**
(45) **Date of Patent: May 2, 2017**

(54) **SEAL GIRDING A STICK OF PIPE OR A PIPELINE IN THE ENTRY OR EXIT PORTS OF A PIPE FUSION CHAMBER**

(71) Applicant: **McElroy Manufacturing Inc.**, Tulsa, OK (US)

(72) Inventor: **Timothy M. Thoman**, Tulsa, OK (US)

(73) Assignee: **McElroy Manufacturing, Inc.**, Tulsa, OK (US)

(*) Notice: Subject to any disclaimer, the term of this patent is extended or adjusted under 35 U.S.C. 154(b) by 894 days.

(21) Appl. No.: **14/029,580**

(22) Filed: **Sep. 17, 2013**

(65) **Prior Publication Data**

US 2015/0076772 A1 Mar. 19, 2015

(51) **Int. Cl.**

H05B 3/62	(2006.01)
F16J 15/00	(2006.01)
F16L 5/02	(2006.01)
B29C 65/20	(2006.01)
B29C 65/00	(2006.01)

(52) **U.S. Cl.**

CPC ***F16L 5/025*** (2013.01); *B29C 65/2092* (2013.01); *B29C 66/0018* (2013.01); *B29C 66/1142* (2013.01); *B29C 66/5221* (2013.01); *B29C 66/71* (2013.01); *B29C 66/8414* (2013.01)

(58) **Field of Classification Search**

CPC ... F16J 15/00; F16J 15/16; F16J 15/32; H05B 3/00; H05B 3/62; B29C 66/00

USPC 219/56–67, 520–537; 277/345–353, 500

See application file for complete search history.

(56) **References Cited**

U.S. PATENT DOCUMENTS

3,365,203 A *	1/1968	Wallis	F16J 3/00	138/125
4,219,203 A *	8/1980	Lovelace	B64G 1/58	277/637
5,014,917 A *	5/1991	Sirocky	B64G 1/50	239/265.11
5,427,387 A *	6/1995	Johnston	F16J 15/3244	277/559
8,083,234 B2 *	12/2011	Groom	F16C 29/08	277/345

FOREIGN PATENT DOCUMENTS

DE	10 2008 050229 A1	4/2010
DE	10 2011 105446 A1	12/2012
EP	1 500 853 A1	1/2005
JP	H08 187782 A	7/1996
JP	H10 122428 A	5/1998

* cited by examiner

Primary Examiner — Michael LaFlame, Jr.

(74) *Attorney, Agent, or Firm* — Frank J. Catalano; Gable Gotwals

(57) **ABSTRACT**

A seal obstructs the migration of particulates and precipitation into a pipe fusion chamber through its pipe stick entry and pipeline exit passages. Sheets of cloth serially overlap the anticipated center axis of a pipe stick/pipeline which will pass through the machine. The outer edge of each sheet is pleated and fixed to a frame contiguous with the perimeter of the passage and the inner edge of each sheet is gathered on an elastic band. When a face of a pipe stick/pipeline pushes the sheets away from the frame, the pleats and bands cooperate to allow the inner edges of the sheets to slide over the face and hug substantially the entire outer circumference of the pipe stick/pipeline.
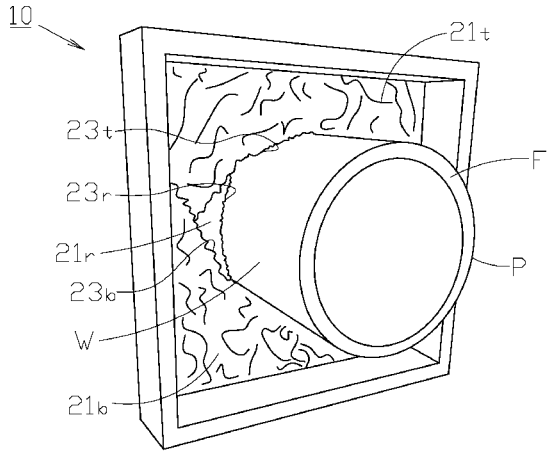
12 Claims, 9 Drawing Sheets