US009636155B2

(12) **United States Patent**
Taber et al.

(10) **Patent No.: US 9,636,155 B2**
(45) **Date of Patent: May 2, 2017**

(54) **METHOD AND APPARATUS FOR AN INTRAMUDULLARY IMPLANT AND METHOD OF IMPLANTATION THEREOF**

(71) Applicant: **BioMedical Enterprises, Inc.**, San Antonio, TX (US)

(72) Inventors: **Joseph H. Taber**, San Antonio, TX (US); **Daniel F. Cheney**, San Antonio, TX (US); **Joe Ritz**, San Antonio, TX (US); **Don Peterson**, San Antonio, TX (US); **Bernard Humes**, San Antonio, TX (US)

(73) Assignee: **BioMedical Enterprises, Inc.**, San Antonio, TX (US)

(*) Notice: Subject to any disclaimer, the term of this patent is extended or adjusted under 35 U.S.C. 154(b) by 29 days.

(21) Appl. No.: **14/804,826**

(22) Filed: **Jul. 21, 2015**

(65) **Prior Publication Data**

US 2015/0320460 A1 Nov. 12, 2015

Related U.S. Application Data

(63) Continuation-in-part of application No. 14/487,315, filed on Sep. 16, 2014.

(Continued)

(51) **Int. Cl.**

A61B 17/72 (2006.01)
A61B 17/88 (2006.01)

(Continued)

(52) **U.S. Cl.**

CPC ***A61B 17/7266*** (2013.01); ***A61B 17/7291*** (2013.01); ***A61B 17/8872*** (2013.01);

(Continued)

(58) **Field of Classification Search**

CPC A61B 17/7266; A61B 17/7291; A61B 17/7258; A61B 17/7233; A61B 17/7283;

(Continued)

(56) **References Cited**

U.S. PATENT DOCUMENTS

5,120,175 A 6/1992 Arbegast et al.
5,171,252 A 12/1992 Friedland

(Continued)

FOREIGN PATENT DOCUMENTS

CN 87101011 A 2/1988
EP 0326426 B1 12/1994

(Continued)

OTHER PUBLICATIONS

Prandi, Bernard, Development of a New Nitinol Implant for Hand Surgery, Proceedings of the International Conference of Shape Memory and Superelastic Technologies, Oct. 3-7, 2004, Kurhaus BadeBaden, Baden-Baden, Germany.

(Continued)

Primary Examiner — Julianna N Harvey
(74) *Attorney, Agent, or Firm* — Christopher L. Makay

(57) **ABSTRACT**

A method of loading an implant inserter with an implant tab and an intramedullary orthopedic implant includes placing the intramedullary orthopedic implant engaged with the implant tab in an implant tab press tool. The implant tab press tool closes the implant tab, which is then moved to a locked position. The implant press tool opens, and the implant tab coupled with the intramedullary orthopedic implant is removed therefrom. The implant tab coupled with the intramedullary orthopedic implant and the implant inserter are placed in an inserter press tool. The inserter press tool closes the implant inserter, which is then moved to a locked position. The inserter press tool opens, and the implant inserter loaded with the implant tab and the
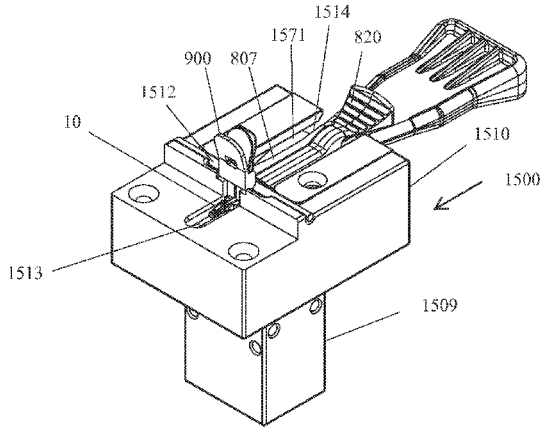
(Continued)