US005428355A

United States Patent [19]

Jondrow et al.

[11] **Patent Number: 5,428,355**

[45] **Date of Patent: Jun. 27, 1995**

[54] **POSITION ENCODER SYSTEM**

[75] Inventors: **Timothy J. Jondrow; Robert B. E. Puckette; Michael D. Derocher; Steven L. Fogle,** all of Corvallis, Oreg.

[73] Assignee: **Hewlett-Packard Corporation,** Palo Alto, Calif.

[21] Appl. No.: **856,436**

[22] Filed: **Mar. 23, 1992**

[51] **Int. Cl.**[6] **H03K 17/94;** G06F 3/033; G06K 11/06

[52] **U.S. Cl.** **341/20;** 341/22; 341/33; 345/157; 345/161; 345/163; 345/168; 364/190; 364/708.1; 364/709.1; 364/709.11; 361/679; 361/680; 361/683

[58] **Field of Search** 341/20, 22, 26, 33; 340/870.37; 345/157, 158, 160, 161, 163, 168, 169; 364/188–190, 708.1, 709.01, 709.08, 709.09, 709.11, 709.12, 709.13; 200/600; 361/288, 679, 683, 680

[56] **References Cited**

U.S. PATENT DOCUMENTS

3,068,457	12/1962	Nevius .	
3,125,716	3/1964	Machlis .	
3,198,937	8/1965	Wooster .	
3,222,591	12/1965	Mynall .	
3,702,467	11/1972	Melnyk	340/870.37
3,723,866	3/1973	Michaud et al.	324/662
3,857,092	12/1974	Meyer	324/662
3,873,916	3/1975	Sterki	324/725
3,938,113	2/1976	Dobson et al.	340/870.37
3,961,318	6/1976	Farrand et al.	324/660
4,182,981	1/1980	Shum et al.	324/662
4,217,542	8/1980	Abbe et al.	324/662
4,404,560	9/1983	Williams, Jr.	324/660
4,420,754	12/1983	Andermo	324/660
4,453,316	6/1984	Marveggio	33/199 R
4,459,702	7/1984	Medwin	377/24
4,581,676	4/1986	Baxter et al.	361/283.4
4,586,260	5/1986	Baxter et al.	33/706
4,654,524	3/1987	Kita	250/231.14
4,654,581	3/1987	Neukermans et al.	324/725
4,680,577	7/1987	Straayer et al.	345/160
4,743,838	5/1988	Eckerle	324/660
4,743,902	5/1988	Andermo	324/660
4,782,327	11/1988	Kley et al.	341/20
4,798,004	1/1989	Suzuki	33/793
4,823,364	4/1989	Herzog	375/36
4,857,828	8/1989	Celine	340/568
4,896,554	1/1990	Culver	74/471 X Y
4,920,342	4/1990	Gratke	341/22
4,935,728	6/1990	Kley	345/161
4,959,615	9/1990	Andermo	340/870.37
5,049,863	9/1991	Oka	345/163
5,126,955	6/1992	Tomoda	361/680
5,172,485	12/1992	Gerhard et al.	33/706
5,270,710	12/1993	Gaultier et al.	341/33

FOREIGN PATENT DOCUMENTS

0404975A1	1/1991	European Pat. Off. .
0404980A1	6/1991	European Pat. Off. .
0435429A1	7/1991	European Pat. Off. .
2017188	8/1971	Germany .
2150928	5/1972	Germany .
2217183	12/1972	Germany .
2246660	5/1973	Germany .
2254567	5/1973	Germany .
2218824	10/1973	Germany .
2853142	5/1988	Germany .
59-214712A	4/1984	Japan .
1523943	9/1978	United Kingdom .
2118720A	11/1983	United Kingdom .
2139359A	11/1984	United Kingdom .
2266360A	10/1993	United Kingdom .

OTHER PUBLICATIONS

Electronics Week, Jul. 23, 1984, p. 26, 'Puck Pointer' Combines Functions of Mouse and Joystick in Number-Pad Sized Package.

(List continued on next page.)

Primary Examiner—Jeffrey A. Hofsass
Assistant Examiner—Andrew Hill

[57] **ABSTRACT**

The position encoder system requires no keyboard surface area and includes a retractable and extendable handle that is stored inside the computer when not in use. The handle is extended for use near the computer keyboard. The movement of the handle is sensed by a high resolution sensing system that consumes relatively little power.
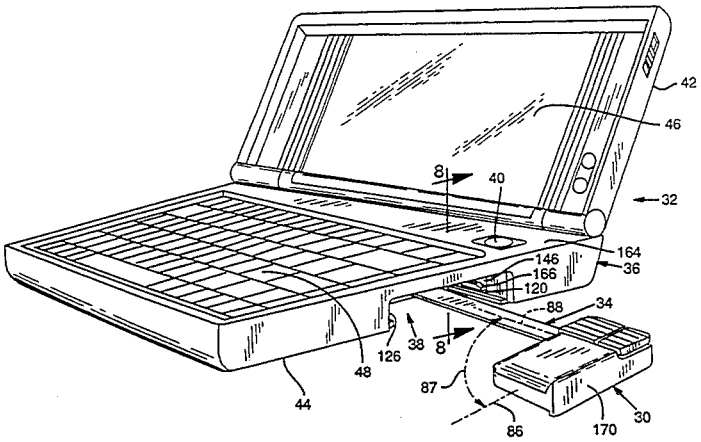
36 Claims, 11 Drawing Sheets