US007722355B2

(12) **United States Patent**
Murphy et al.

(10) **Patent No.: US 7,722,355 B2**
(45) **Date of Patent: *May 25, 2010**

(54) **BRAILLE CELL CAP**

(75) Inventors: **Patrick Murphy**, Riverview, FL (US); **Todd Conard**, Ruskin, FL (US); **Waldemar Tunkis**, Palm Harbor, FL (US); **Michael Goldenberg**, Melbourne Beach, FL (US); **Carlos Rodriguez**, Palm Harbor, FL (US)

(73) Assignee: **Freedom Scientific, Inc.**, St. Petersburg, FL (US)

(*) Notice: Subject to any disclaimer, the term of this patent is extended or adjusted under 35 U.S.C. 154(b) by 32 days.

This patent is subject to a terminal disclaimer.

(21) Appl. No.: **12/115,302**

(22) Filed: **May 5, 2008**

(65) **Prior Publication Data**

US 2008/0280266 A1 Nov. 13, 2008

Related U.S. Application Data

(63) Continuation of application No. 10/711,427, filed on Sep. 17, 2004, now Pat. No. 7,367,806.

(51) **Int. Cl.**
G09B 21/00 (2006.01)

(52) **U.S. Cl.** **434/112**

(58) **Field of Classification Search** 434/112, 434/113, 115, 117; 400/109.1
See application file for complete search history.

(56) **References Cited**

U.S. PATENT DOCUMENTS

4,836,784 A * 6/1989 Joachim 434/113
5,165,897 A * 11/1992 Johnson 434/113
5,226,817 A * 7/1993 Nakajima et al. 434/113
5,449,292 A * 9/1995 Tani et al. 434/114
5,685,720 A * 11/1997 Kashi 434/114
5,820,377 A * 10/1998 Murphy et al. 434/113
5,842,867 A * 12/1998 Hong et al. 434/114
6,109,922 A * 8/2000 Litschel et al. 434/114
6,354,839 B1 * 3/2002 Schmidt et al. 434/113
6,700,553 B2 * 3/2004 Becker et al. 345/31
6,705,868 B1 * 3/2004 Schleppenbach et al. 434/114
6,712,613 B2 * 3/2004 Depta 434/114
6,743,021 B2 * 6/2004 Prince et al. 434/113
6,776,619 B1 * 8/2004 Roberts et al. 434/113
7,083,416 B1 * 8/2006 Goldenbert 434/113
2004/0091842 A1 * 5/2004 Carro 434/112
2004/0175677 A1 * 9/2004 Koch et al. 434/113
2004/0197745 A1 * 10/2004 Hong et al. 434/113
2005/0158695 A1 * 7/2005 Takahashi 434/113

* cited by examiner

Primary Examiner—Kurt Fernstrom
(74) *Attorney, Agent, or Firm*—Foley & Lardner LLP

(57) **ABSTRACT**

An electromechanical Braille cell assembly includes a plurality of parallel bimorph reeds. A first plurality of bimorph reeds is mounted to a first side of a printed circuit board by a first plurality of clips and a second plurality of bimorph reeds is mounted to a second side of the printed circuit board by a second plurality of clips. A frame has a top wall, a bottom wall, a first side wall in the form of an angle wall and a second side wall in the form of a flat wall. Pinholes are formed in the angle wall to accommodate Braille pins and the flat wall is slotted to accommodate a plurality of printed circuit boards. A monolithic cap covers all of the Braille pins. Pinholes formed in the cap receive the respective tips of the Braille cells when actuated bimorph reeds cause displacement of the Braille pins.
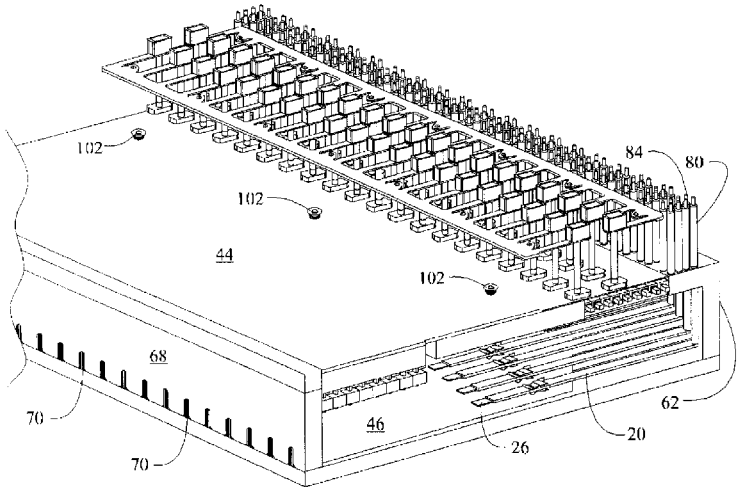
5 Claims, 15 Drawing Sheets