April 4, 1967 E. R. ROSSI ET AL 3,312,555

HANDLE-ANCHORED FORMED SUGAR BLOCK AND METHOD OF PRODUCING SAME

Filed May 12, 1965 2 Sheets-Sheet 1

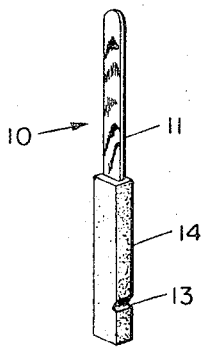

FIG. 1

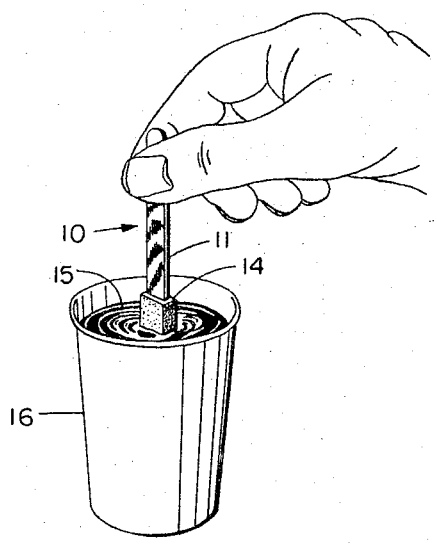

FIG. 2

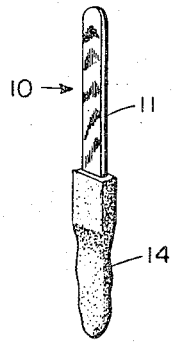

FIG. 3

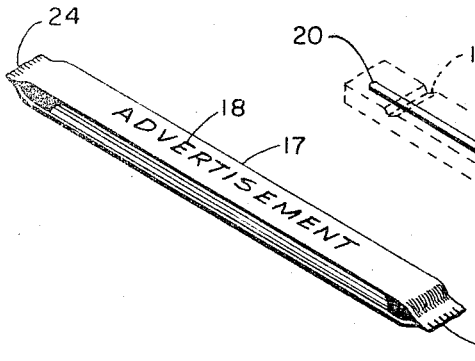

FIG. 4

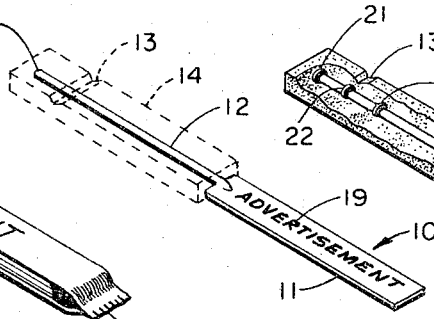

FIG. 5

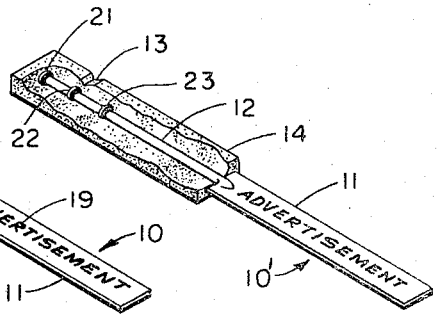

FIG. 6

INVENTORS
EMIL R. ROSSI
BY ALDO A. RAINERO, JR.
Peter J. Gaylor
ATTORNEY