US009411355B2

(12) **United States Patent**
Cocetta

(10) **Patent No.: US 9,411,355 B2**
(45) **Date of Patent: Aug. 9, 2016**

(54) **CONFIGURABLE SLOPE TEMPERATURE SENSOR**

(71) Applicant: **Infineon Technologies Austria AG**, Villach (AT)

(72) Inventor: **Franco Cocetta**, Premariacco (IT)

(73) Assignee: **Infineon Technologies Austria AG**, Villach (AT)

(*) Notice: Subject to any disclaimer, the term of this patent is extended or adjusted under 35 U.S.C. 154(b) by 211 days.

(21) Appl. No.: **14/334,654**

(22) Filed: **Jul. 17, 2014**

(65) **Prior Publication Data**

US 2016/0018839 A1 Jan. 21, 2016

(51) **Int. Cl.**

G05F 1/10	(2006.01)
G05F 3/30	(2006.01)
G05F 3/22	(2006.01)

(52) **U.S. Cl.**
CPC . ***G05F 3/30*** (2013.01); ***G05F 3/225*** (2013.01)

(58) **Field of Classification Search**
CPC G05F 3/225; G05F 3/30
See application file for complete search history.

(56) **References Cited**

U.S. PATENT DOCUMENTS

8,710,912 B2 * 4/2014 Marinca G05F 3/30 327/539
8,922,190 B2 * 12/2014 Wu G05F 1/10 323/297

* cited by examiner

Primary Examiner — Jeffrey Zweizig
(74) *Attorney, Agent, or Firm* — Eschweiler & Associates, LLC

(57) **ABSTRACT**

Representative implementations of devices and techniques provide a configurable slope of a voltage response of a band-gap-based temperature sensor circuit. The slope and/or a translation of the voltage response may be configured by current domain operations at a strategic node.
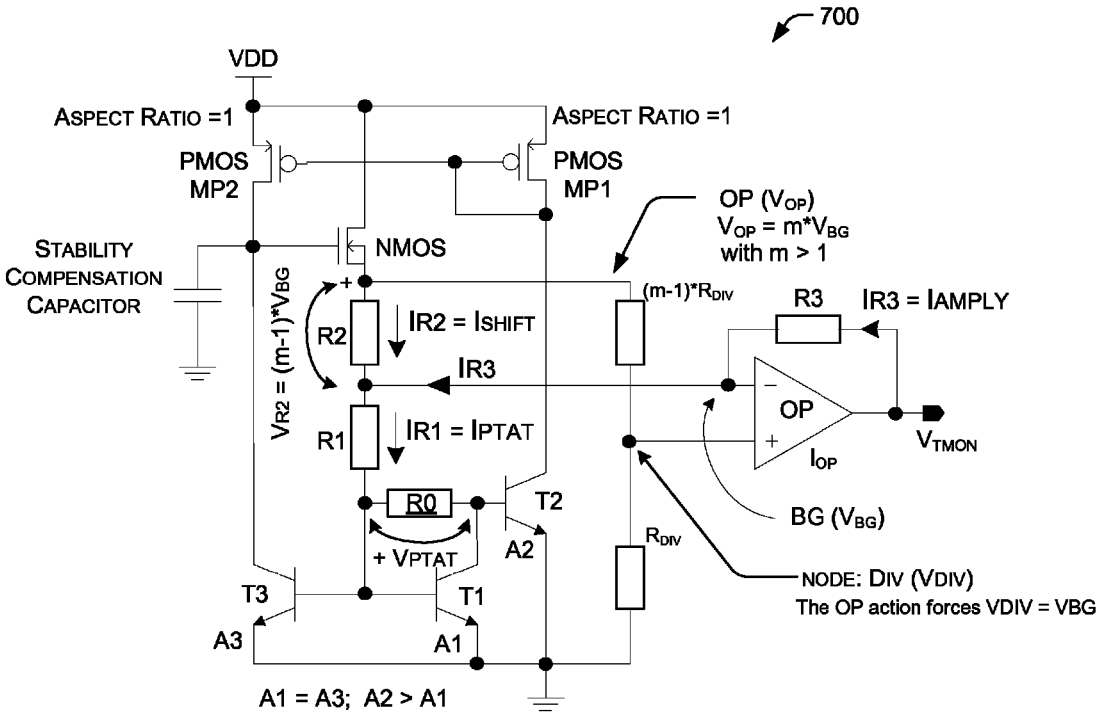
25 Claims, 12 Drawing Sheets