US009411255B1

(12) **United States Patent**
Wu et al.

(10) **Patent No.: US 9,411,255 B1**
(45) **Date of Patent: Aug. 9, 2016**

(54) **ELECTROSTATIC CHARGING MEMBER**

(71) Applicant: **Xerox Corporation**, Norwalk, CT (US)

(72) Inventors: **Jin Wu**, Pittsford, NY (US); **Christopher D. Blair**, Webster, NY (US); **Amy C. Porter**, Pittsford, NY (US); **Lin Ma**, Pittsford, NY (US)

(73) Assignee: **Xerox Corporation**, Norwalk, CT (US)

(*) Notice: Subject to any disclaimer, the term of this patent is extended or adjusted under 35 U.S.C. 154(b) by 0 days.

(21) Appl. No.: **14/853,503**

(22) Filed: **Sep. 14, 2015**

(51) **Int. Cl.**
G03G 15/02 (2006.01)

(52) **U.S. Cl.**
CPC ***G03G 15/0233*** (2013.01)

(58) **Field of Classification Search**
CPC G03G 15/0233; G03G 15/0216
See application file for complete search history.

(56) **References Cited**

U.S. PATENT DOCUMENTS

8,090,298	B2	1/2012	Hoshio et al.	
2008/0075505	A1*	3/2008	Nagamori	G03G 15/0233 399/176
2011/0052252	A1*	3/2011	Lin	G03G 15/0233 399/109
2012/0213553	A1*	8/2012	Hoshio	G03G 15/0233 399/176

* cited by examiner

Primary Examiner — Gregory H Curran
(74) *Attorney, Agent, or Firm* — Hoffman Warnick LLC

(57) **ABSTRACT**

The present teachings described a bias charging member and a method of manufacture. According to an embodiment, there is provided a bias charging member. The bias charging member includes an outer surface layer disposed on the conductive core. The outer surface layer includes ceramic microspheres having an average size of from 1 micron to 40 microns present in an amount of from about 5 to about 40 weight percent of the outer layer.
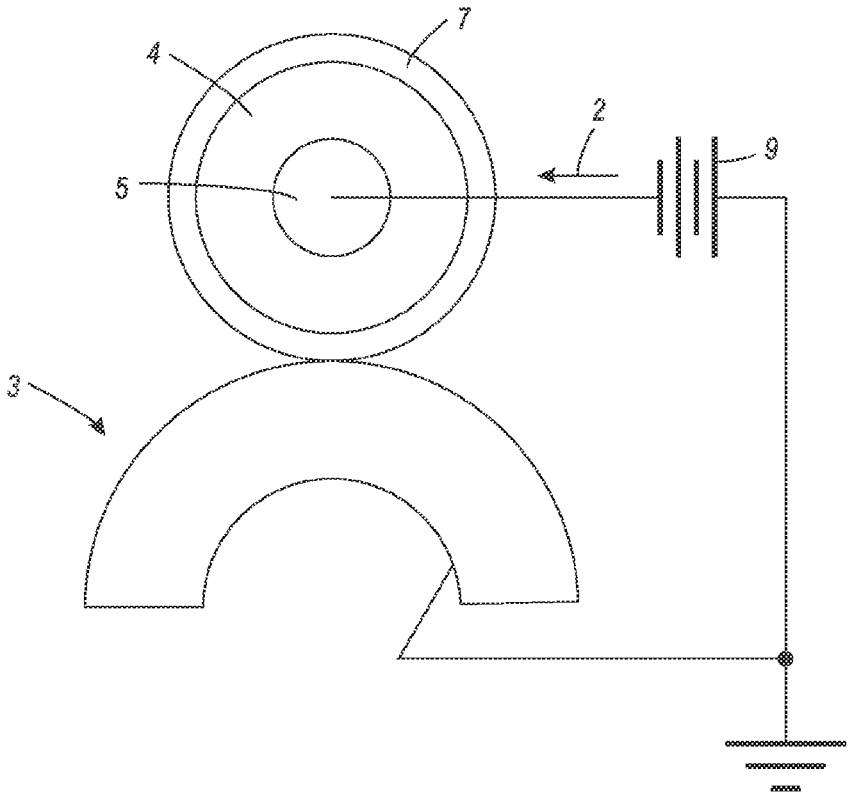
17 Claims, 1 Drawing Sheet