US009411155B2

(12) **United States Patent**
Lee et al.

(10) **Patent No.: US 9,411,155 B2**
(45) **Date of Patent: Aug. 9, 2016**

(54) **OPTICAL ZOOM PROBE**

(71) Applicant: **Samsung Electronics Co., Ltd.**, Suwon-si (KR)

(72) Inventors: **Seung-wan Lee**, Suwon-si (KR); **Eun-sung Lee**, Hwaseong-si (KR); **Jong-hyeon Chang**, Suwon-si (KR); **Kyu-dong Jung**, Suwon-si (KR); **Min-seog Choi**, Seoul (KR)

(73) Assignee: **SAMSUNG ELECTRONICS CO., LTD.**, Suwon-Si (KR)

(*) Notice: Subject to any disclaimer, the term of this patent is extended or adjusted under 35 U.S.C. 154(b) by 288 days.

(21) Appl. No.: **14/040,851**

(22) Filed: **Sep. 30, 2013**

(65) **Prior Publication Data**

US 2014/0092388 A1 Apr. 3, 2014

(30) **Foreign Application Priority Data**

Sep. 28, 2012 (KR) 10-2012-0109260

(51) **Int. Cl.**

G02B 26/10	(2006.01)
G02B 7/04	(2006.01)
A61B 1/00	(2006.01)
G02B 3/14	(2006.01)
A61B 5/00	(2006.01)
G01N 23/04	(2006.01)
G02B 23/24	(2006.01)
G01N 21/27	(2006.01)
G01N 21/17	(2006.01)

(52) **U.S. Cl.**

CPC ***G02B 26/10*** (2013.01); ***A61B 1/0019*** (2013.01); ***G02B 3/14*** (2013.01); ***G02B 7/04*** (2013.01); *A61B 5/0066* (2013.01); *A61B 5/0068* (2013.01); *A61B 5/0073* (2013.01); *G01N 23/046* (2013.01); *G01N 2021/1787* (2013.01); *G01N 2223/419* (2013.01); *G02B 23/2438* (2013.01)

(58) **Field of Classification Search**

None

See application file for complete search history.

(56) **References Cited**

U.S. PATENT DOCUMENTS

7,978,346	B1	7/2011	Riza	
8,184,367	B2	5/2012	Rolland et al.	
2004/0254474	A1*	12/2004	Seibel	A61B 5/0062 600/473
2006/0256448	A1*	11/2006	Oh	G02B 26/005 359/666
2007/0156021	A1*	7/2007	Morse	A61B 1/0019 600/167
2009/0147372	A1*	6/2009	Chang	G02B 13/0075 359/665
2010/0149651	A1*	6/2010	Berge	G02B 26/005 359/666
2010/0309560	A1*	12/2010	Dharmatilleke	G02B 3/14 359/666
2011/0118610	A1*	5/2011	Kuiper	A61B 1/0019 600/476
2012/0013990	A1*	1/2012	Yamamoto	G02B 3/14 359/666
2012/0026596	A1*	2/2012	Berge	G02B 26/005 359/665
2012/0143004	A1*	6/2012	Gupta	A61B 1/00096 600/117

(Continued)

FOREIGN PATENT DOCUMENTS

EP	1 798 958	A1 *	6/2007	G02B 5/005
JP	201113582	A	1/2011	

(Continued)

Primary Examiner — Gordon J Stock, Jr.

(74) *Attorney, Agent, or Firm* — Sughrue Mion, PLLC

(57) **ABSTRACT**

An optical zoom probe is provided. The optical zoom probe includes: an aperture adjuster which adjusts an aperture through which light which is transmitted by a light transmitter propagates; and a focus adjuster which focuses light that propagates through the aperture and which includes first and second liquid lenses for each of which respective curvatures are independently controlled so as to adjust a respective focal length.
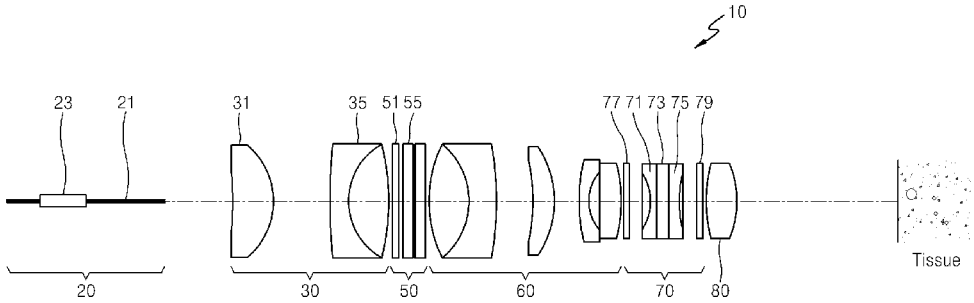
19 Claims, 11 Drawing Sheets