US009409655B1

(12) **United States Patent**
Vallart et al.

(10) **Patent No.: US 9,409,655 B1**
(45) **Date of Patent: Aug. 9, 2016**

(54) **FLIGHT INSTRUMENT DISPLAYING A VARIABLE ROTATIONAL SPEED OF A MAIN ROTOR OF AN AIRCRAFT**

(71) Applicant: **AIRBUS HELICOPTERS**, Marignane (FR)

(72) Inventors: **Jean-Baptiste Vallart**, Marseilles (FR); **Patrick Hellio**, Bouc Bel Air (FR); **Patricia Gauthier**, Les Milles (FR); **Setareh Taheri**, Marseilles (FR)

(73) Assignee: **Airbus Helicopters**, Marignane (FR)

(*) Notice: Subject to any disclaimer, the term of this patent is extended or adjusted under 35 U.S.C. 154(b) by 0 days.

(21) Appl. No.: **14/607,162**

(22) Filed: **Jan. 28, 2015**

(51) **Int. Cl.**
B64D 45/00 (2006.01)
B64C 27/57 (2006.01)
B64D 43/00 (2006.01)

(52) **U.S. Cl.**
CPC ***B64D 45/00*** (2013.01); ***B64C 27/57*** (2013.01); ***B64D 43/00*** (2013.01)

(58) **Field of Classification Search**
CPC B64D 43/00; B64D 45/00; B64C 27/57; B64C 19/00; B64C 27/04
USPC 340/971, 946, 969; 701/3, 14
See application file for complete search history.

(56) **References Cited**

U.S. PATENT DOCUMENTS

6,195,598	B1	2/2001	Bosqui et al.	
6,411,869	B2 *	6/2002	Permanne	701/14
8,295,997	B2	10/2012	De Bono et al.	
9,150,307	B2 *	10/2015	Eglin	B64C 27/57
9,216,820	B2 *	12/2015	Eglin	B64C 27/04
2009/0088922	A1 *	4/2009	Mesec	B64C 27/008 702/183
2010/0235019	A1	9/2010	De Bono et al.	
2010/0312421	A1	12/2010	Eglin	

FOREIGN PATENT DOCUMENTS

EP	2402716	1/2012
FR	2756256	5/1998
FR	2943131	9/2010
FR	2946322	12/2010
WO	9742466	11/1997
WO	2006081334 A2	8/2006
WO	2006081334 A3	8/2006

OTHER PUBLICATIONS

French Search Report for FR 1302254, Completed by the French Patent Office on Aug. 6, 2014, 7 Pages.

* cited by examiner

Primary Examiner — John A Tweel, Jr.
(74) *Attorney, Agent, or Firm* — Brooks Kushman P.C.

(57) **ABSTRACT**

A flight instrument that displays the rotational speed of a main rotor of a rotary-wing aircraft, with the flight instrument including display means, a first indicator of a setpoint for the rotational speed of the main rotor, a second indicator of the first current value of the rotational speed of the main rotor, and third and fourth indicators of the limit values of the rotational speed. The setpoint for the rotational speed of the main rotor is variable and the first indicator is stationary on the display means, with the second, third and fourth indicators being movable in relation to the first indicator.
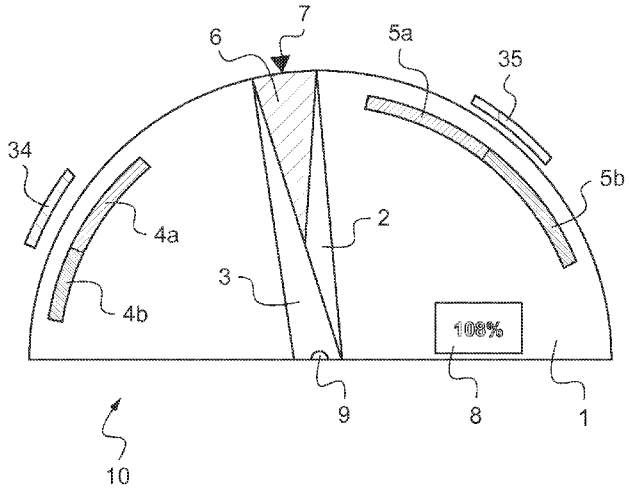
19 Claims, 2 Drawing Sheets