US009408955B2

(12) **United States Patent**
Jenkins et al.

(10) **Patent No.: US 9,408,955 B2**
(45) **Date of Patent: Aug. 9, 2016**

(54) **NASAL FLUID MANAGEMENT DEVICE**

(71) Applicant: **Acclarent, Inc.**, Menlo Park, CA (US)

(72) Inventors: **Thomas R. Jenkins**, Alameda, CA (US); **Jessica M. Liberatore**, San Mateo, CA (US); **Randy J. Kesten**, Mountain View, CA (US); **Radit Tantisira**, Menlo Park, CA (US)

(73) Assignee: **Acclarent, Inc.**, Irvine, CA (US)

(*) Notice: Subject to any disclaimer, the term of this patent is extended or adjusted under 35 U.S.C. 154(b) by 0 days.

(21) Appl. No.: **14/199,338**

(22) Filed: **Mar. 6, 2014**

(65) **Prior Publication Data**

US 2014/0276627 A1 Sep. 18, 2014

Related U.S. Application Data

(63) Continuation-in-part of application No. 14/193,134, filed on Feb. 28, 2014, which is a continuation-in-part of application No. 14/039,387, filed on Sep. 27, 2013, which is a continuation-in-part of application No. 13/832,180, filed on Mar. 15, 2013.

(51) **Int. Cl.**

A61M 1/00	(2006.01)
A61F 13/38	(2006.01)
A61F 13/36	(2006.01)

(Continued)

(52) **U.S. Cl.**

CPC ***A61M 1/0058*** (2013.01); ***A61B 17/1219*** (2013.01); ***A61B 17/12036*** (2013.01); ***A61B 17/12104*** (2013.01); ***A61B 17/12168*** (2013.01); ***A61B 17/24*** (2013.01); ***A61F 13/38*** (2013.01); ***A61M 1/008*** (2013.01); *A61B 2017/00738* (2013.01); *A61F 13/385* (2013.01)

(58) **Field of Classification Search**

CPC A61F 13/36; A61F 13/38; A61M 1/0058; A61M 1/008; A61M 1/0023; A61M 1/0039; A61M 1/0064; A61M 1/0086; A47L 13/10; A47L 17/04; A47L 17/06; A47L 17/08; A47L 13/44; A47L 13/46

See application file for complete search history.

(56) **References Cited**

U.S. PATENT DOCUMENTS

3,394,702 A 7/1968 Heimlich et al.
3,519,364 A * 7/1970 Truhan 401/177

(Continued)

FOREIGN PATENT DOCUMENTS

IT WO 2013021273 A1 * 2/2013 ..... A61B 10/0045

OTHER PUBLICATIONS

International Search Report dated Sep. 15, 2014 for PCT/US2014/022390.

(Continued)

Primary Examiner — Adam Marcetich
(74) *Attorney, Agent, or Firm* — Frost Brown Todd LLC

(57) **ABSTRACT**

An apparatus comprises a body and a conduit. The body comprises an absorbent material. The conduit is in fluid communication with the body. The conduit has a suction opening positioned within the absorbent material. The conduit is operable to draw fluid away from the absorbent material. The apparatus may be positioned within the posterior choana or the nasopharynx of a patient using a deployment instrument. The apparatus may prevent fluids from draining from the nasal cavity into the patient's throat. In some instances, the apparatus is used as a plug during a sinus irrigation procedure to prevent irrigation fluid from traveling down the patient's throat.
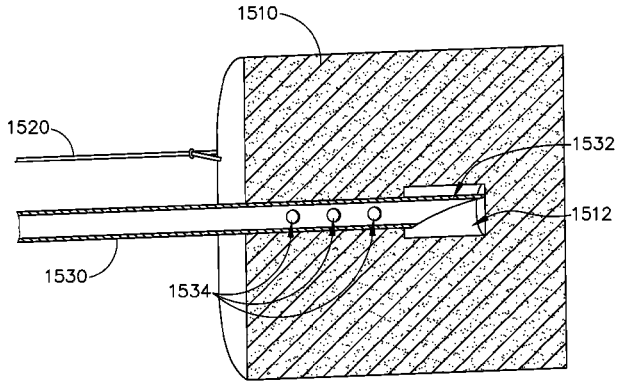
18 Claims, 39 Drawing Sheets