6655X

T. Woolson,

Cook Stove.
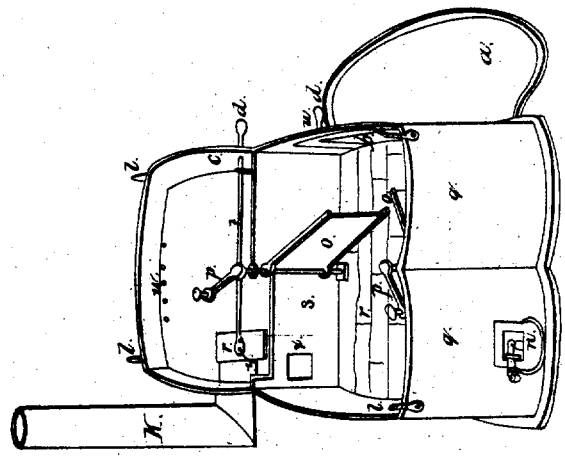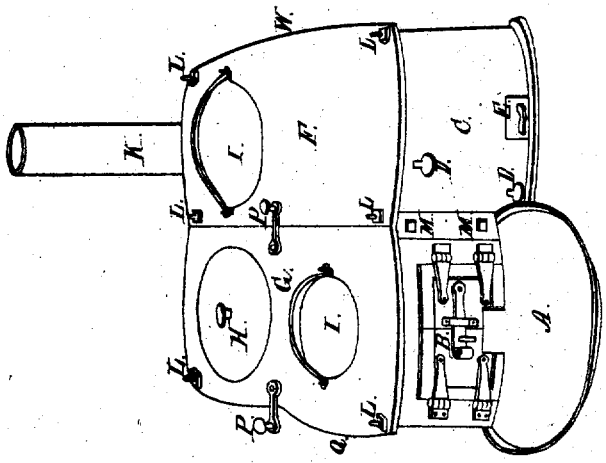
Patented July 20 1831.