US006797454B1

(12) **United States Patent**
Johnson et al.

(10) **Patent No.: US 6,797,454 B1**
(45) **Date of Patent: Sep. 28, 2004**

(54) **METHOD AND APPARATUS FOR THERMAL PROCESSING A PHOTOSENSITIVE ELEMENT**

(75) Inventors: **Melvin Harry Johnson**, Claremont, CA (US); **David Anthony Belfiore**, Kennett Square, PA (US); **Mark A. Hackler**, Ocean, NJ (US); **Anandkumar Ramakrishnan Kannurpatti**, East Windsor, NJ (US); **Robert Lee Brown**, Newark, DE (US); **Stephen Cushner**, Lincroft, NJ (US); **Robert Finley Drury**, East Windsor, NJ (US)

(73) Assignee: **E. I. du Pont de Nemours and Company**, Wilmington, DE (US)

(*) Notice: Subject to any disclaimer, the term of this patent is extended or adjusted under 35 U.S.C. 154(b) by 107 days.

(21) Appl. No.: **10/069,426**

(22) PCT Filed: **Sep. 6, 2000**

(86) PCT No.: **PCT/US00/24400**

§ 371 (c)(1),
(2), (4) Date: **Feb. 19, 2002**

(87) PCT Pub. No.: **WO01/18604**

PCT Pub. Date: **Mar. 15, 2001**

Related U.S. Application Data

(60) Provisional application No. 60/152,660, filed on Sep. 7, 1999.

(51) **Int. Cl.**[7] **G03F 7/34**

(52) **U.S. Cl.** **430/306**; 430/309; 430/330; 430/348; 430/413; 101/463.1

(58) **Field of Search** 430/348, 270.1, 430/271.1, 273.1, 281.1, 286.1, 287.1, 288.1, 306, 309, 330, 401, 413, 644, 945; 101/463.1

(56) **References Cited**

U.S. PATENT DOCUMENTS

3,060,023 A		10/1962	Burg et al.	
5,175,072 A	*	12/1992	Martens	430/254
5,279,697 A	*	1/1994	Peterson et al.	156/358
2002/0009672 A1	*	1/2002	Daems et al.	430/273.1
2003/0180655 A1	*	9/2003	Fan et al.	430/270.1

FOREIGN PATENT DOCUMENTS

EP	0468745 A2	1/1992
EP	0469735 A2	2/1992

* cited by examiner

Primary Examiner—Barbara Gilliam
(74) *Attorney, Agent, or Firm*—Thomas H. Magee

(57) **ABSTRACT**

A method and apparatus for thermal processing a photosensitive element includes heating a composition layer on a flexible substrate to a melt temperature of an unirradiated area of the composition layer and maintaining the flexible substrate at a temperature below the melt temperature while pressing a heated absorbent layer against the heated composition layer, and repeating these steps for multiple cycles. A further embodiment of the method includes a step of cooling the flexible substrate and layer laminate on each cycle to maintain the flexible substrate at the desired temperature below that of the heated composition layer.
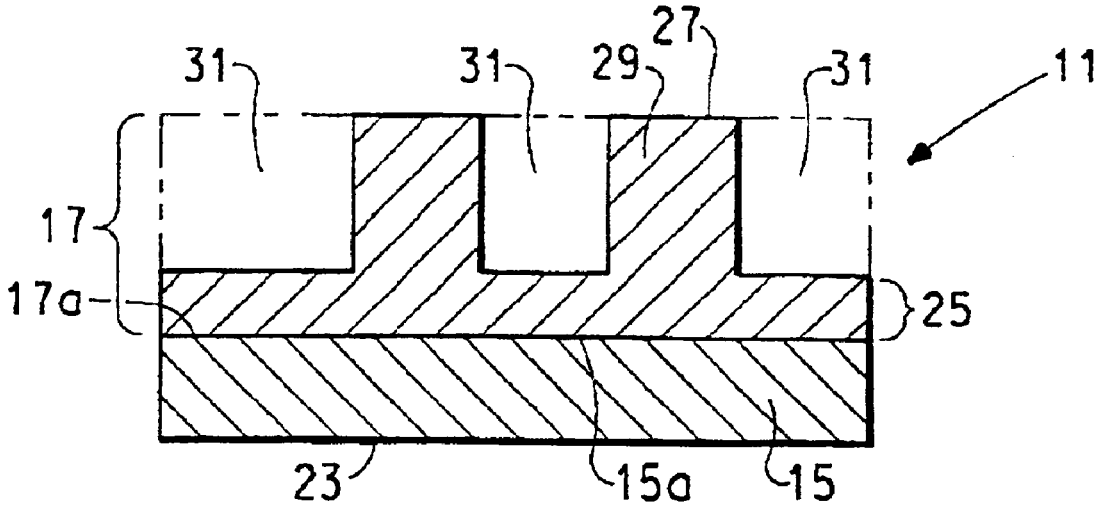
19 Claims, 16 Drawing Sheets