United States Patent [19]

Tsugei et al.

[11] **Patent Number: 4,696,054**

[45] **Date of Patent: Sep. 22, 1987**

[54] **POCKETABLE WIRELESS TRANSMITTER AND RECEIVER**

[75] Inventors: **Shinji Tsugei; Tomohiro Inoue,** both of Nara, Japan

[73] Assignee: **Sharp Kabushiki Kaisha,** Osaka, Japan

[21] Appl. No.: **876,670**

[22] Filed: **Jun. 23, 1986**

Related U.S. Application Data

[63] Continuation of Ser. No. 561,291, Dec. 14, 1983, abandoned.

[30] **Foreign Application Priority Data**

Dec. 16, 1982 [JP] Japan ..... 57-191094[U]

[51] **Int. Cl.**[4] **H04B 1/38;** H04B 1/06

[52] **U.S. Cl.** **455/89;** 455/344; 455/351; 340/825.44

[58] **Field of Search** ..... 455/89, 90, 38, 228, 455/351, 344; 340/825–844; 358/263; 179/2 C; 379/37

[56] **References Cited**

U.S. PATENT DOCUMENTS

3,944,724	3/1976	Kilby et al.	455/351
3,976,995	8/1976	Sebestyen	455/351
3,995,106	11/1976	Wern et al.	358/263
4,268,721	5/1981	Nielson et al.	179/2 C
4,306,294	12/1981	Hashimoto et al.	455/344
4,336,524	6/1982	Levine	340/825.44
4,477,807	10/1984	Nakajima et al.	455/38

FOREIGN PATENT DOCUMENTS

2622305	5/1956	Fed. Rep. of Germany	455/89

OTHER PUBLICATIONS

Winston; "How to Get On 6 Meters," October, 1981.

Resco, "Emergency Location Altering System," Aug. 1979, p. 2.

Goodman, "The Radio Amateur's Handbook," 1966.

Primary Examiner—Robert L. Griffin

Assistant Examiner—Curtis Kuntz

Attorney, Agent, or Firm—Birch, Stewart, Kolasch & Birch

[57] **ABSTRACT**

A wireless communicating device comprises a receiving circuit for wirelessly receiving message serial number information and a display for displaying the message serial number information. Preferably and additionally, the device may comprise a transmission circuit for wirelessly transmitting the message serial number, preferably, repetitively.
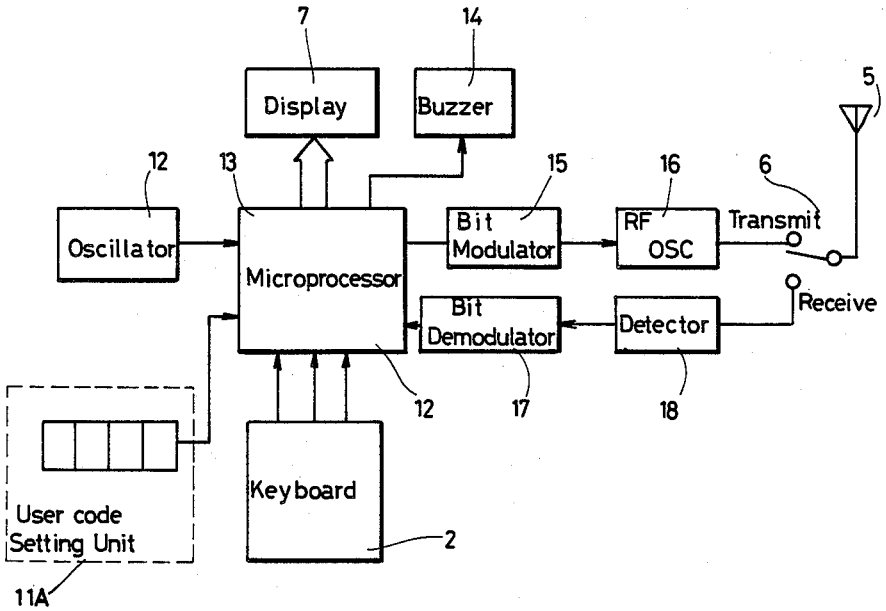
5 Claims, 6 Drawing Figures