NAIL PACKAGE STRUCTURE

Filed June 5, 1968 3 Sheets-Sheet 2

FIG. 3

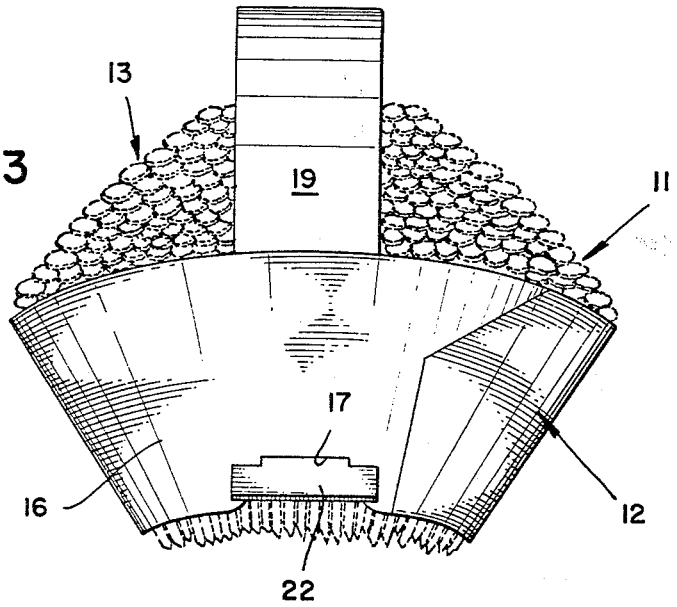

FIG. 4

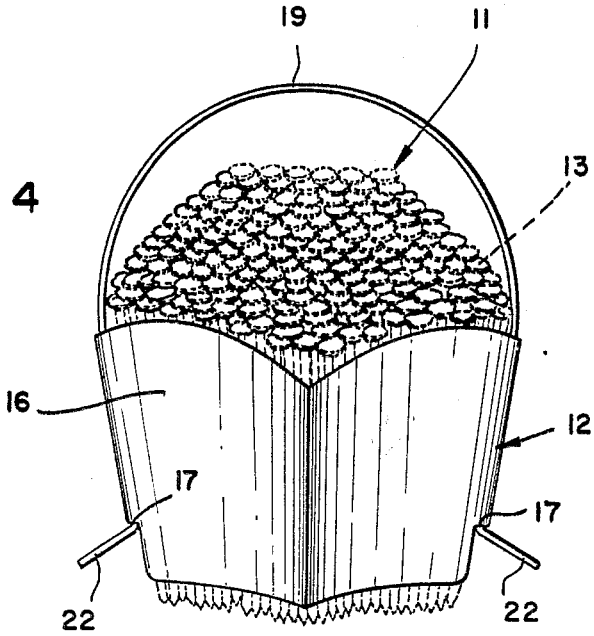

INVENTOR.
I. WALTON BADER
BY
I. Walton Bader
ATTORNEY