NAIL PACKAGE STRUCTURE

Filed June 5, 1968 3 Sheets-Sheet 1

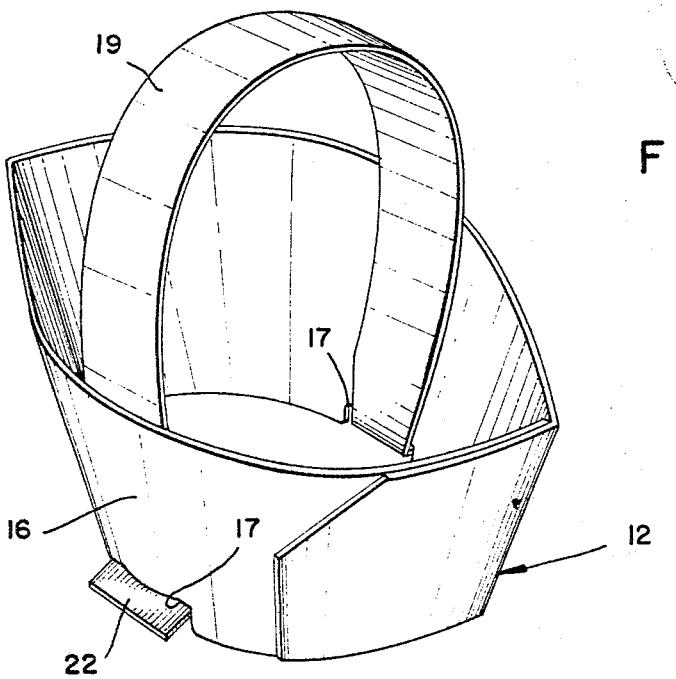

FIG. 1

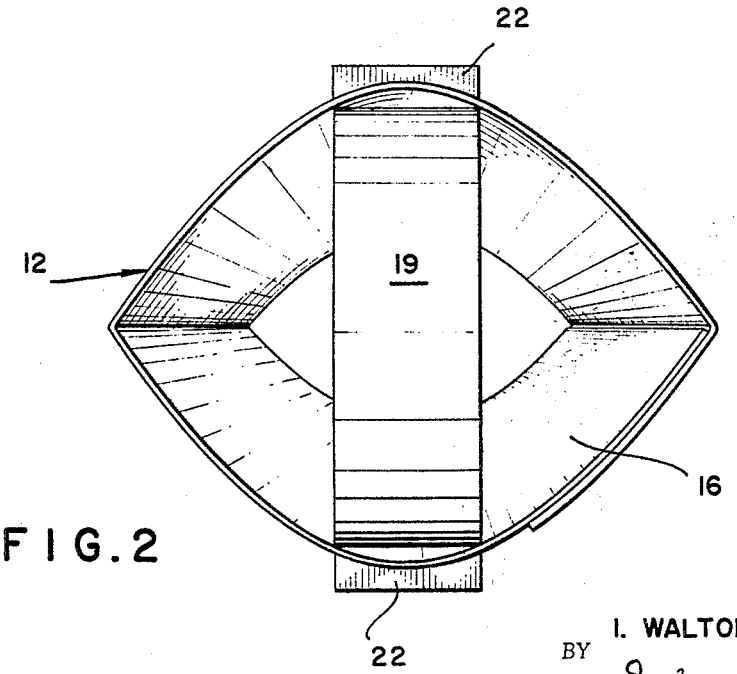

FIG. 2

INVENTOR.
I. WALTON BADER
BY I. Walton Bader
ATTORNEY