Figure 1A (Prior Art)

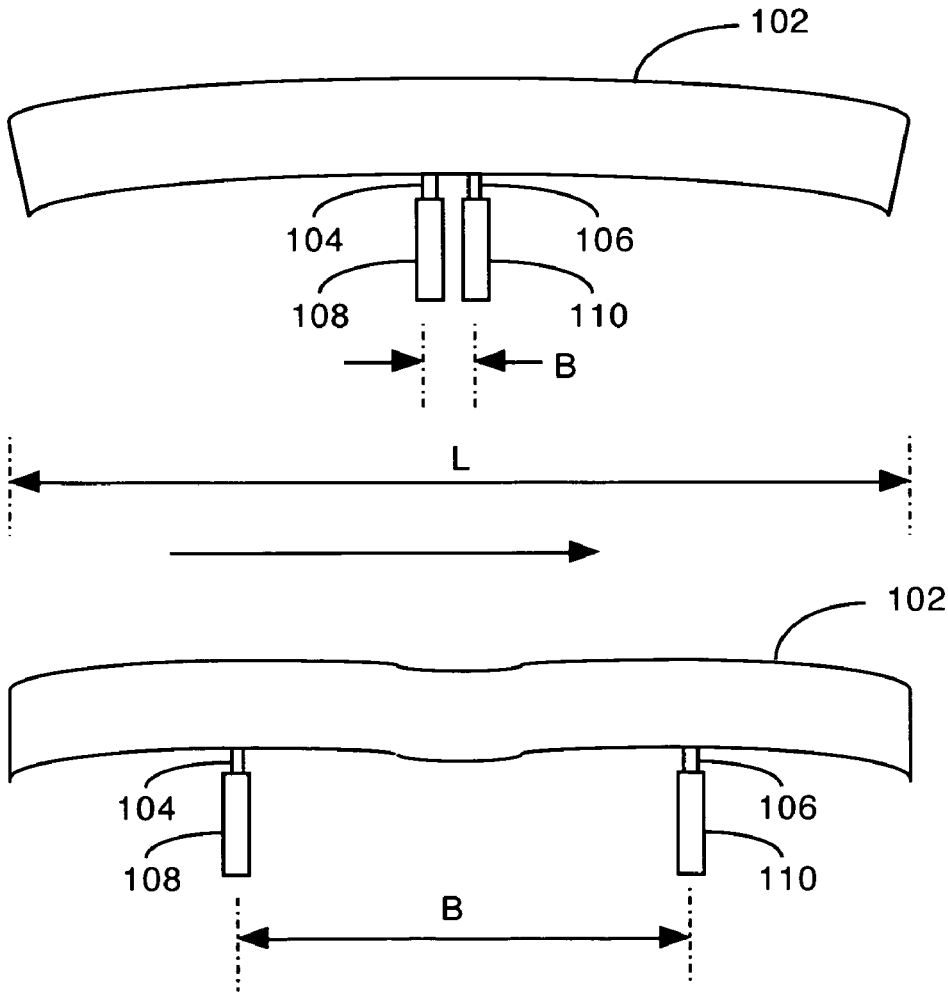

Figure 1B (Prior Art)