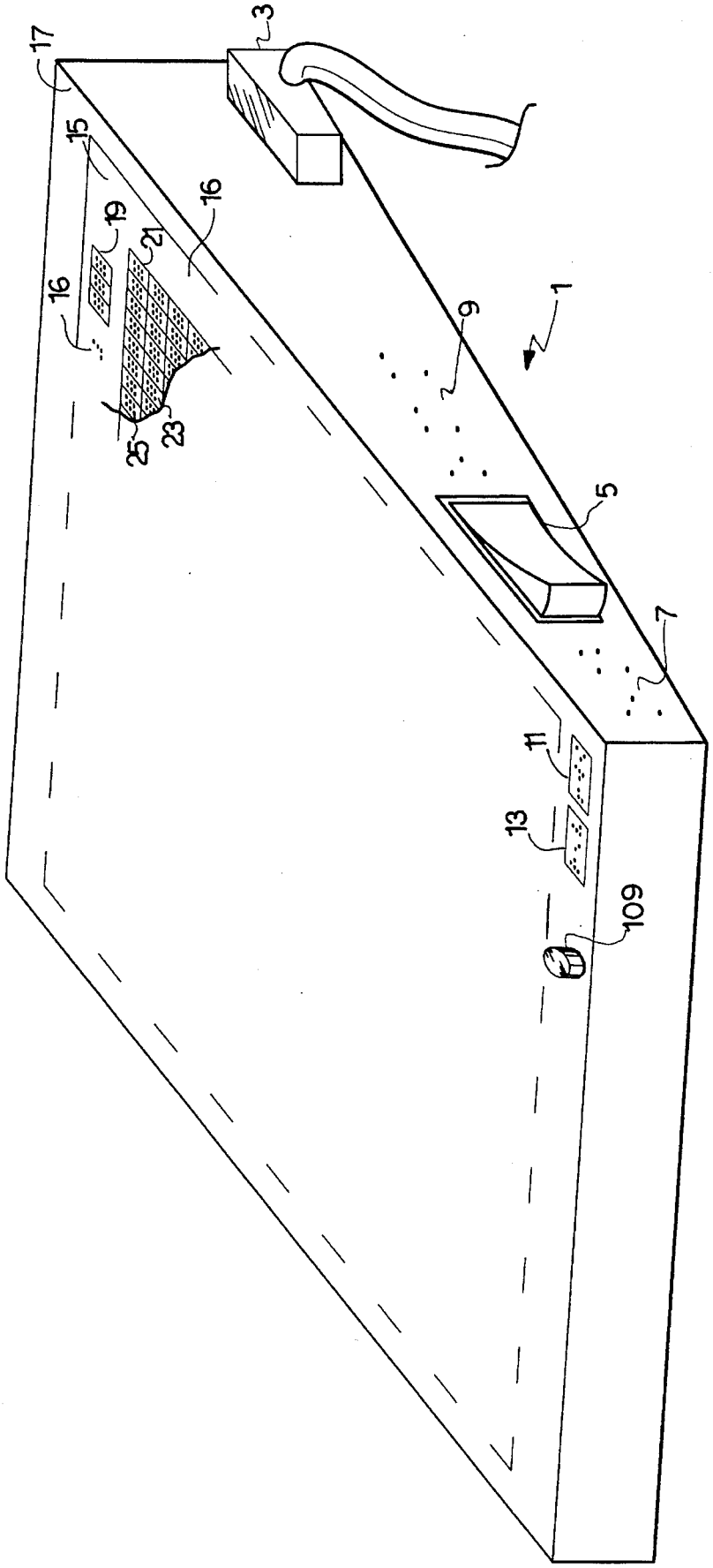

Fig 1