US008163254B1

(12) **United States Patent**
Renzi et al.

(10) **Patent No.: US 8,163,254 B1**
(45) **Date of Patent: *Apr. 24, 2012**

(54) **MICROMANIFOLD ASSEMBLY**

(75) Inventors: **Ronald F. Renzi**, Tracy, CA (US); **Scott M. Ferko**, Livermore, CA (US)

(73) Assignee: **Sandia Corporation**, Albuquerque, NM (US)

(*) Notice: Subject to any disclaimer, the term of this patent is extended or adjusted under 35 U.S.C. 154(b) by 246 days.

This patent is subject to a terminal disclaimer.

(21) Appl. No.: **12/476,002**

(22) Filed: **Jun. 1, 2009**

Related U.S. Application Data

(62) Division of application No. 10/405,842, filed on Apr. 2, 2003, now Pat. No. 7,553,455.

(51) **Int. Cl.**
B01L 3/00 (2006.01)
B01L 3/02 (2006.01)

(52) **U.S. Cl.** **422/502**; 422/503; 422/504; 422/500; 422/501; 422/512

(58) **Field of Classification Search** 422/512, 422/500–504
See application file for complete search history.

(56) **References Cited**

U.S. PATENT DOCUMENTS

5,890,745 A * 4/1999 Kovacs 285/24
6,102,449 A * 8/2000 Welsh 285/342
6,284,113 B1 * 9/2001 Bjornson et al. 204/453
6,319,476 B1 * 11/2001 Victor et al. 422/502
6,376,253 B1 * 4/2002 Anderson et al. 436/86
6,682,702 B2 * 1/2004 Barth et al. 422/552
6,756,019 B1 * 6/2004 Dubrow et al. 422/502
6,811,668 B1 * 11/2004 Berndt et al. 204/601
6,811,752 B2 * 11/2004 Barbera-Guillem 422/503
6,832,787 B1 * 12/2004 Renzi 285/124.1
7,311,882 B1 * 12/2007 Renzi 422/546
7,452,507 B2 * 11/2008 Renzi et al. 422/82.05
7,553,455 B1 * 6/2009 Renzi et al. 422/546
2002/0110900 A1 * 8/2002 Jovanovich et al. 435/286.4
2002/0172621 A1 * 11/2002 Barbera-Guillem 422/100
2004/0126279 A1 * 7/2004 Renzi et al. 422/100

* cited by examiner

Primary Examiner — Brian R Gordon

(74) *Attorney, Agent, or Firm* — Timothy R. Evans

(57) **ABSTRACT**

A micromanifold for connecting external capillaries to the inlet and/or outlet ports of a microfluidic device can employ a ferrule/capillary assembly that includes: (a) a ferrule comprising an elongated member and having a bore traversing from a proximal end to a distal end of the member, wherein the bore has an inner surface and wherein the distal end of the ferrule has a tapered, threaded exterior surface, and (b) a capillary that is positioned within the bore wherein the capillary's outer surface is in direct contact with the bore's inner surface. No mating sleeve is required for the one-piece ferrule. Alternatively, the capillaries can be bonded to channels that traverse the manifold and therefore obviate the need for a ferrule.
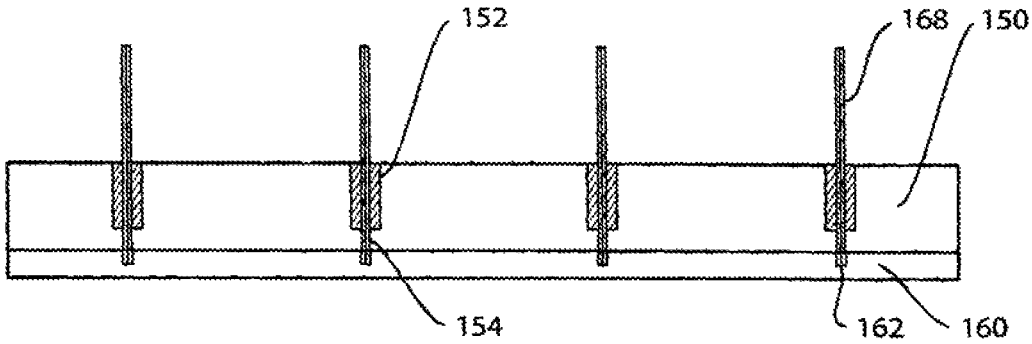
8 Claims, 3 Drawing Sheets