Nov. 8, 1960 W. WELKOWITZ 2,959,054

ULTRASONIC FLOWMETER

Filed Jan. 14, 1957 2 Sheets-Sheet 1

Fig. 1.

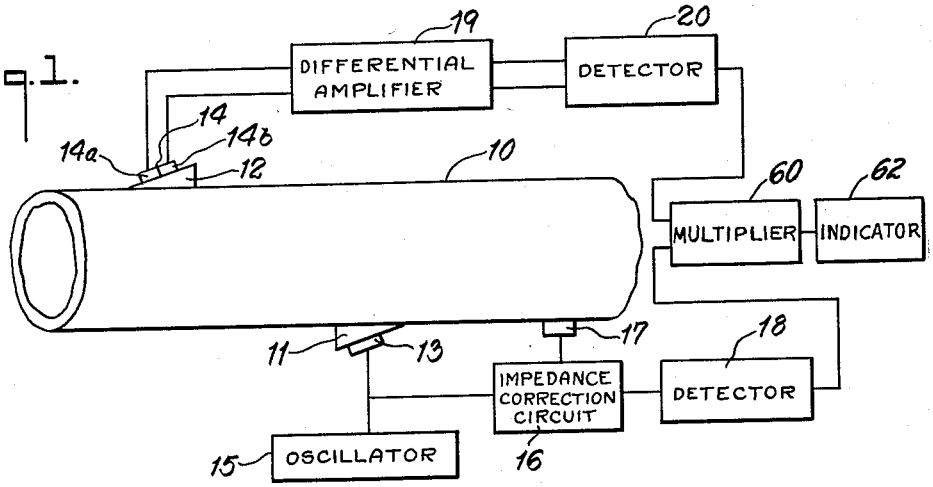

Fig. 2.

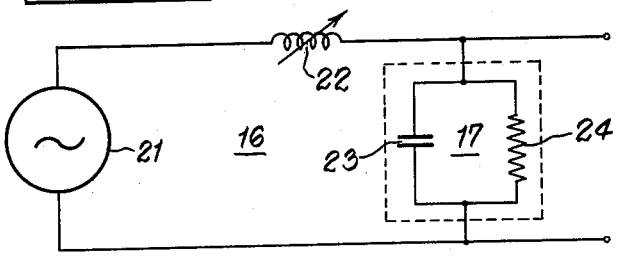

Fig. 3.

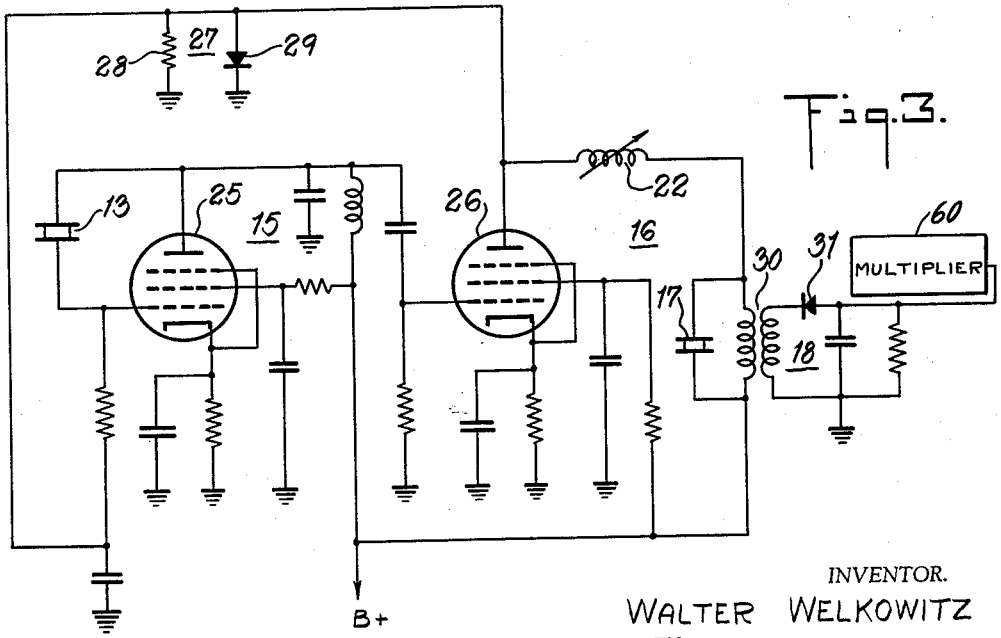

INVENTOR.
WALTER WELKOWITZ
BY
Cyrus D. Samuelson
ATTORNEY