United States Patent [19]

Nativi et al.

[11] **Patent Number: 5,051,654**

[45] **Date of Patent: Sep. 24, 1991**

[54] **ELECTROLUMINESCENT LAMP AND METHOD OF MANUFACTURE**

[75] Inventors: **Larry A. Nativi**, Rocky Hill, Conn.; **Robert H. Marion**, Lebanon; **Tahsin A. Ashour**, Amherst, both of N.H.

[73] Assignee: **Loctite Luminescent Systems, Inc.**, Lebanon, N.H.

[21] Appl. No.: **544,761**

[22] Filed: **Jun. 27, 1990**

Related U.S. Application Data

[63] Continuation of Ser. No. 285,796, Dec. 16, 1988, abandoned.

[51] **Int. Cl.**[5] **H05B 33/04**

[52] **U.S. Cl.** **313/506**; 313/509; 313/512; 427/66

[58] **Field of Search** 313/506, 509, 512; 427/66

[56] **References Cited**

U.S. PATENT DOCUMENTS

4,066,925	1/1978	Dickson	313/503
4,104,555	8/1978	Fleming	313/512
4,593,228	6/1986	Albrechtson et al.	313/512
4,687,968	8/1987	Frayer	313/509
4,767,966	8/1988	Simopoulos et al.	313/509

FOREIGN PATENT DOCUMENTS

2049274 12/1980 United Kingdom .

Primary Examiner—Donald J. Yusko
Assistant Examiner—Michael Horabik
Attorney, Agent, or Firm—Edward K. Welch, II; Eugene F. Miller

[57] **ABSTRACT**

An improved electroluminescent lamp is described comprising a desiccant layer comprising a formed-in-place patternable hygroscopic film layer.
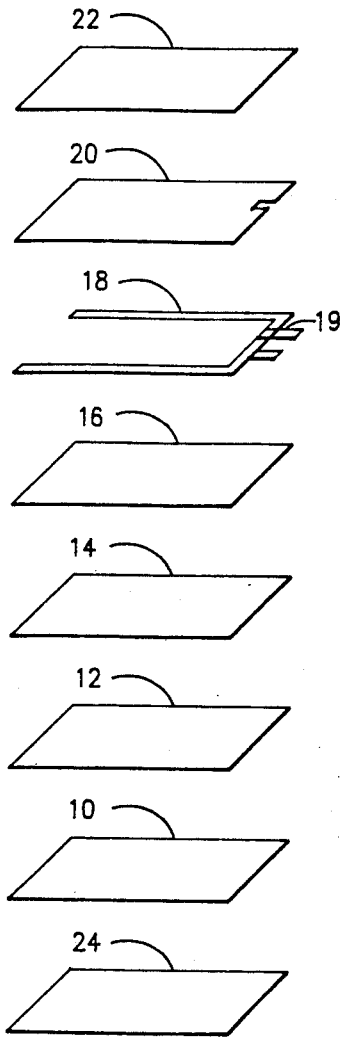
17 Claims, 2 Drawing Sheets