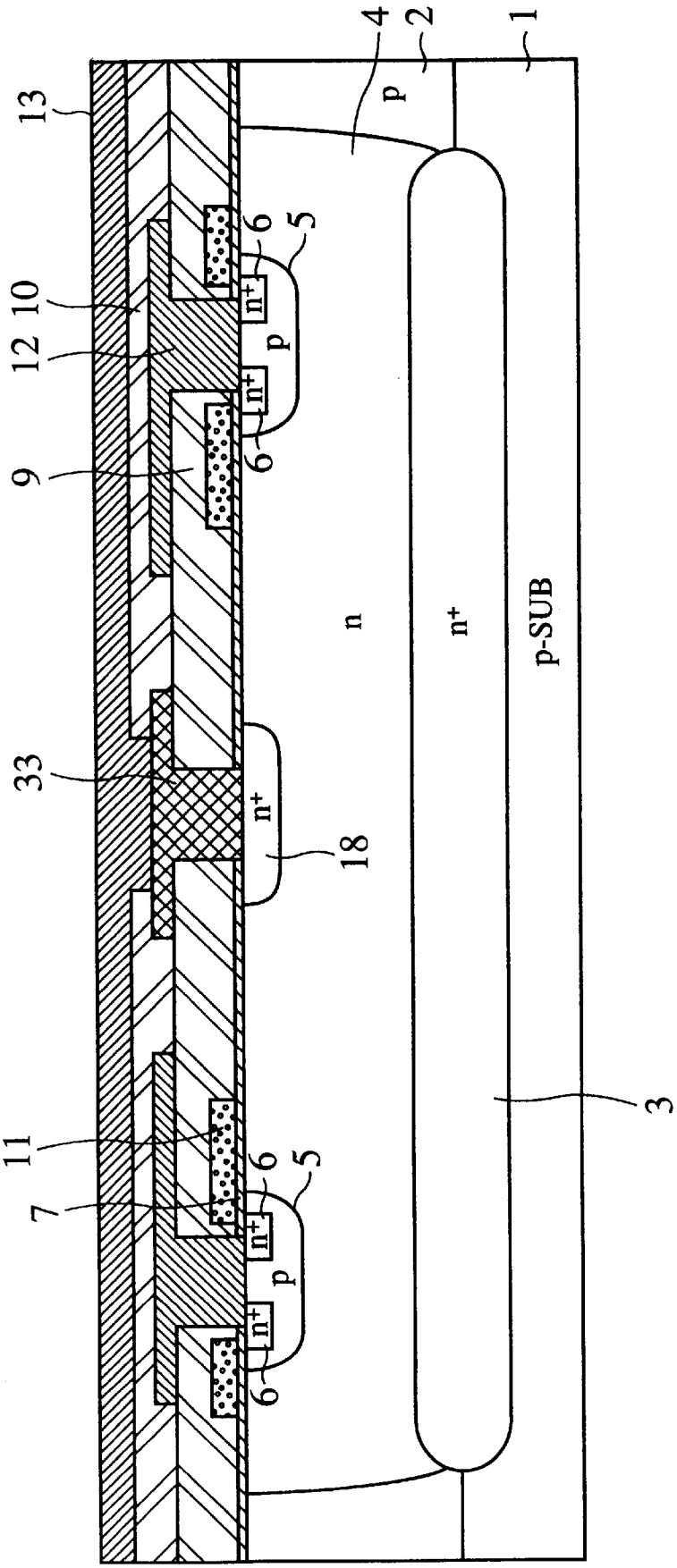

FIG.1
PRIOR ART